ALMATEC

Installation and Operation

High Purity Air-Operated Diaphragm Pump

E-SERIES

E 08 - E 50

CE

Read this manual before installation and use

115A7531

Contents

	Page
Overview	3
Scope of Application and Hazard Information	3
Storage and Long-term Use	3
Model Description	4
Application in Explosion-proof Areas or for Conveying Flammable Materials	5
Specific Operating Conditions	5
ATEX Marking	6
Technical Parameters	7
Performance Curves	8
Installation	
Recommended installation method	10
Pump nozzle	10
Installation, operation and maintenance	11
Torque values	12
Safety tips	13
Notes on submerged installation	14
Additional tips for operating temperature	15
Replacement parts	15
Maintenance	16
Required tools	16
Disassembly	17
Assembly	18
Trouble Shooting	20
List of Parts	
Code EEE - ETZ	22
Code TEE - TTZ	23
Code FEE - FTZ	24
Code UEE - UTZ	25
Code TTT-*USP* – TTZ-*USP*	27
Exploded View of Product	
E08 / E10	28
E15 / E25 / E40 / E50	29
Optional Configuration	
Stroke count (Code C)	30
Diaphragm condition monitoring (D)	32
Special diaphragm (L+P)	32
ANSI standard nozzle (W)	33
Flange connection (F)	33
Food pumps (H)	34
Pulsation damper (TV)	34
Draining system (R)	35
FKM housing gasket (V)	36
External control (Z)	36
More options	36
Dimensional Drawing	37
ET and ET-F Series Pulsation Dampers	38

Overview

ALMATEC air-operated diaphragm pumps are manufactured with advanced technology to deliver reliable performance. Operational errors or improper use may lead to risks, resulting in property damage or personal injury. This pump is designed for specific purposes and must be used under safe conditions.

Personnel responsible for installing, starting, operating or maintaining ALMATEC air-operated diaphragm pump should read this manual carefully and strictly adhere to the instructions and safety instructions herein.

Scope of Application and Hazard Information

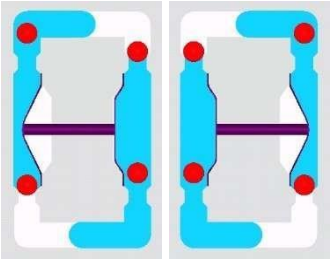

ALMATEC E series pumps operate as reciprocating positive displacement pumps based on the principle of air-operated double diaphragm pump. Its basic configuration consists of two Side housings and an Center housing. Each Side housing features a pump chamber sealed by clamping the diaphragm with the intermediate and the Side housings. The two diaphragms are connected via a transmission shaft, enabling alternate reciprocating motion under the action of the air motor. In the first schematic diagram on the left, compressed air pushes the left diaphragm towards the pump chamber, transferring the medium to the discharge port through the open valve. At the same time, the right diaphragm fills the pump chamber by suction. When the stroke ends, the system automatically reverses. In the second diagram, the medium is drawn in by the diaphragm on the left and discharged by the diaphragm on the right.

Correct use of ALMATEC E series pumps: They shall operate within the operating parameters specified in this manual, and follow the instructions for commissioning, operation, assembly, disassembly and maintenance.

While safety measures are detailed in this manual as far as possible, possible leakage or mechanical damage may still cause potential risks, and uncontrollable medium leakage may also occur in the sealing area or joint.

Storage and Long-term Use

Under normal circumstances, ALMATEC E series pumps are delivered well-packaged and thoroughly inspected. If it is not installed immediately, ensure proper storage, which are very important for trouble-free operation in the future. The pump must be protected from moisture, cold, dust, ultraviolet radiation and mechanical damage.

The following storage conditions are recommended:

- The pump shall be stored in a well-ventilated, dust-free and vibration-free environment.
- Maintain an ambient temperature of 15–25°C (59–77°F) and relative humidity below 65%.
- Avoid direct heat sources (such as direct sunlight, high temperature baking, etc.).

The aging rate of plastic materials will be affected by material properties, the surrounding environment and usage conditions. Long-term exposure to chemicals and/or high temperature will change material characteristics, especially mechanical properties. Therefore, for safety reasons, we recommend the following actions for every maintenance (at least once every six months after for two years upon installation):

Inspect all pump parts for visible damage.

Perform a tactile inspection of all sealing surfaces (such as touching the sealing surfaces with fingers after cleaning).

Check the shape of the housing parts (for example, lean against each plane with a level ruler).

Check the integrity of all threads.

If any parts are damaged, they must be replaced immediately!

Model Description

As a quality-oriented modern enterprise, PSG has obtained ISO9001, 14001 and 45001 management system certifications. Before delivery, each pump has undergone strict quality control with all manufacturing and inspection records properly maintained for traceability.

Operators will verify whether ALMATEC pumps are produced according to the customer orders and meet relevant requirements during production. Therefore, before using the pump, ensure that the pump and its materials are suitable for the intended application and installation environment. Check the pump model to confirm its suitability for your requirements. The model is marked on the nameplate of the pump together with the serial number and the year of manufacture. The following is an example of ALMATEC E series pump models:

E 15 T T T - R

Options (BS: user manual is separate, OG, Z or X: list of spare parts is separate):

BS	With barrier chamber
C	With stroke counting
D	With diaphragm monitoring
F	PN10 flange
H	Food pump (EC 1935/2004)
L	Conductive PTFE/EPDM composite diaphragm
OG	Pump nozzle has no internal thread
P	Modified PTFE diaphragm
R	With draining system
TV	With pulsation damper interface
V	FKM housing gasket PTFE diaphragm
W	ANSI flange
Z	External control
X	Customization

Valve type and material:

E	Ball valve, EPDM
N	Ball valve, NBR
T	Ball valve, PTFE
S	Ball valve, stainless steel
Z	Piston valve, PTFE

Diaphragm material:

E	EPDM
N	NBR
T	PTFE/EPDM composite

Housing material:

E	PE
F	Conductive PE
T	PTFE
U	PTFE Conductive

Pump specification: diameter of pump nozzle

ALMATEC air-operated diaphragm pump, E series

The number in brackets of the parts involved in the following description indicates the part serial number of the parts in the list of spare parts and the exploded view of parts.

Application in Explosion-proof Areas or for Conveying Flammable Materials

X = Warning! = Special operating conditions apply!

For pumping flammable liquids or installation in explosion-proof areas, only pumps with internal and external parts made of conductive plastics can be used. E-Series air-operated diaphragm pumps with housing codes F (conductive PE) or U (conductive PTFE) meet this requirement. Generally, they must be grounded through the grounding terminal located on the Center housing [4], with a cross-section of at least 6mm^2. All other housing parts are conductive, interconnected, and do not need to be grounded separately.

ALMATEC air-operated diaphragm pumps made of conductive PE or PTFE are suitable for use in potentially explosive atmospheres of G (gas) or D (dust) in categories 2 and 3 (Zone 1 and Zone 2 respectively) as regulated by EU Directive 2014/34/EU. Conductive diaphragm (material codes 68, 70 or 72) can be used for pumping all explosive media. Non-conductive diaphragms (material codes 67 or 98) limit the pump's suitability to explosion group IIB for sizes 08 through 25, regardless of installation location. For pumps with specifications 40 and 50, the following protective measures must be taken:

- The pumped medium must be miscible with water or conductive.
- Facilities must be in place to prevent the pump from dry operation.
- Follow the pump operation specifications, and inert with nitrogen, water or carbon dioxide during dry running.

Pipelines and pumps must be grounded separately. Dust deposits on the equipment must be avoided to prevent fire risks. Repairs in hazardous areas may only be performed with appropriate tools and by trained personnel, following a thorough feasibility check.

The ATEX marking conforming to the Directive 2014/34/EU can be found in the declaration of conformity and the nameplate of the pump or damper.

Explosion-proof requirements have been taken into account for the interface of electrical accessories and no new potential fire source will be introduced.

According to the guide of EN ISO 80079-37, the protection type of " **C** = Design safety" is adopted.

Specific Operating Conditions	E 08	E 10	E 15	E 25	E 40	E 50
Permitted ambient temperature °C (°F)	-10 ～50 (14 ～ 122)					
Permitted compressed air temperature °C (°F)	0 ～ 50 (32 ～ 122)					
Maximum driving/operating pressure psi (bar)	101 (7)					
Maximum operating temperature:						
PE °C (°F):	-	-	70 (158)	70 (158)	70 (158)	70 (158)
PTFE °C (°F):	100 (212)	100 (212)	120 (248)	120 (248)	120 (248)	120 (248)
PTFE- pump with NBR parts °C (°F):	80 (176)	80 (176)	80 (176)	80 (176)	80 (176)	80 (176)
PTFE- pump with isolation chamber system °C (°F);	80 (176)	80 (176)	80 (176)	80 (176)	80 (176)	80 (176)
PTFE- pump with conductive PE damper °C (°F);		80 (176)	80 (176)	80 (176)	80 (176)	80 (176)

ATEX Marking for Explosive Gas and Dust Environment According to Directive 2014/34/EU

The ATEX pump is designed for flexibility and customer-specific applications. Markings are made to distinguish between the installation location (hazardous area outside the pump) and the pump interior (hazardous area inside the pump).

Equipment category G (gas, oil mist, steam)

Installation location: Category G

Inside the pump: Category G

Conductive ALMATEC air-operated diaphragm pumps can usually be used in explosion class IIC locations (potential explosion area outside the pump) due to their dissipative one-piece housing and grounding.

Note! The explosive gas class allowed inside the pump depends on the selected diaphragm material:

When non-conductive diaphragm is used, explosive gas class IIB is applicable inside the pump:

Ex **II 2/2 G Ex h IIB/IIC T6…T4 Gb/Gb X** (inside the pump/installation location)

When conductive diaphragm is used, explosive gas class IIC is applicable inside the pump:

Ex **II 2/2 G Ex h IIC/IIC T6…T4 Gb/Gb X** (inside the pump/installation location)

Equipment category D (dust)

Installation location: Category D

Inside the pump: Category G

Conductive ALMATEC air-operated diaphragm pump can usually be used in the dust environment of class IIIC at the installation location (potential explosion area outside the pump, equipment category: D)

Note! Inside the pump (equipment category G), the approved explosive dust class depends on the selected diaphragm material:

When non-conductive diaphragm is used, explosive dust class IIB is applicable inside the pump:

Ex **II 2/2 D Ex h IIB/IIIC T 70°C…130°C Gb/Db X** (inside the pump/installation location)

When conductive diaphragm is used, explosive dust class IIC is applicable inside the pump:

Ex **II 2/2 D Ex h IIC/IIIC T 70°C…130°C Gb/Db X** (inside the pump/installation location)

Technical Parameters

Technical parameters		E 08	E 10	E 15	E 25	E 40	E 50
Outline dimension, mm (in.):	L	88 (3.5)	110 (4.3)	166 (6.5)	220 (8.7)	304 (12.0)	399 (15.7)
	W	128 (5.0)	147 (5.8)	189 (7.4)	255 (10.0)	353 (13.9)	430 (16.9)
	H	129 (5.1)	169 (6.7)	240 (9.4)	320 (12.6)	432 (17.0)	552 (21.7)
Pump Nozzle	NPT	1/4“	3/8“	1/2“	1“	1 1/2“	2“
Air supply connection	BSP	R 1/8	R 1/8	R 1/4	R 1/4	R 1/2	R 1/2
Weight, kg (lb):	PE	-	-	7 (15)	15 (33)	34 (75)	66 (146)
	PTFE	2 (4)	5 (11)	14 (31)	34 (75)	76 (167.6)	152 (335.1)
Maximum particles allowed through ball valve pump	mm (in.)	2 (0.08)	3 (0.12)	4 (0.16)	6 (0.24)	9 (0.35)	11 (0.43)
Dry suction height, mWC (ft):	Cylindervalve	1 (3.3)	2 (6.6)	3 (9.8)	4 (13.1)	5 (16.4)	5 (16.4)
	Ball valve	0,4 (1.3)	1 (3.3)	2 (6.6)	3 (9.8)	4 (13.1)	4 (13.1)
Wet suction height, mWC (ft)		9 (29.5)	9 (29.5)	9,5 (31.2)	9,5 (31.2)	9,5 (31.2)	9,5 (31.2)
Theoretical displacement of single stroke (L)		0,0075	0,0215	0,1	0,34	0,98	2,6
Sound power level L_{WA} [dB (A)]:**							
Drive pressure	3 bar	77,5-84,0	79,5-81,0	77,0-89,0	74,0-84,2	82,2-86,6	66,6-84,9
Drive pressure	5 bar	80,0-86,5	79,5-85,0	75,0-94,0	68,6-87,8	72,2-95,5	73,5-91,5
Drive pressure	7 bar	80,2-87,0	79,5-86,0	74,0-96,0	70,0-91,0	68,5-94,4	67,3-96,0
Sound pressure level L_{pf}, 1 m [dB (A)]:***							
Drive pressure	3 bar	64,1-70,3	65,9-67,5	63,2-74,9	61,7-71,9	69,5-73,9	53,4-71,7
Drive pressure	5 bar	66,2-73,1	65,7-70,8	60,9-80,1	56,3-75,5	59,5-82,8	60,3-78,3
Drive pressure	7 bar	66,8-73,8	65,7-72,1	60,3-82,0	57,7-78,8	55,8-81,7	54,1-82,8

** Depending on the sound power level measured under laboratory conditions and actual conditions according to ENISO3744 and ENISO9614 respectively

*** The sound pressure level is a position-independent average value calculated from the sound power level of the positions listed above

These technical parameters refer to ALMATEC E series pumps without auxiliary equipment.

Performance Curves

These data are obtained with water at room temperature (20°C/68°F) as the test medium.

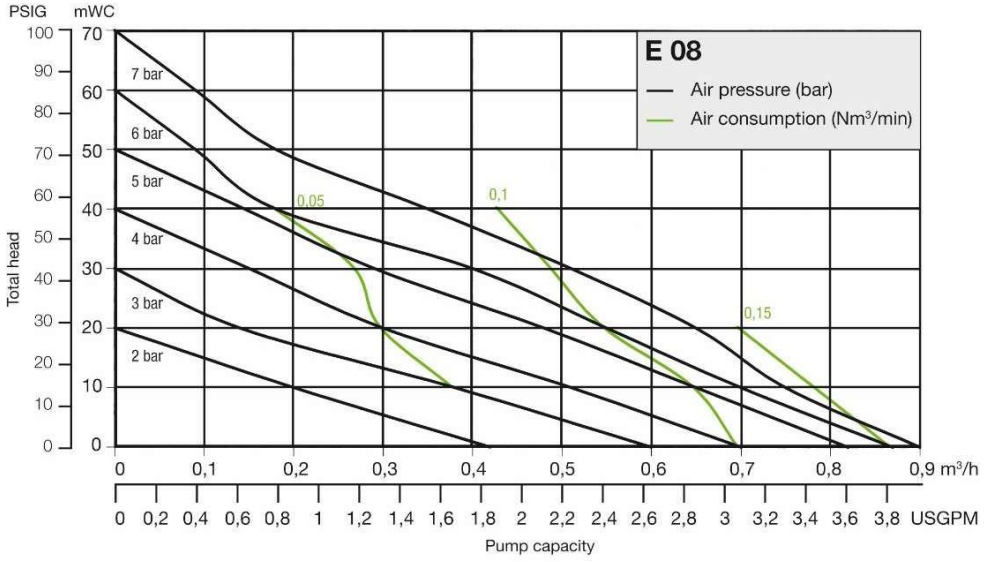

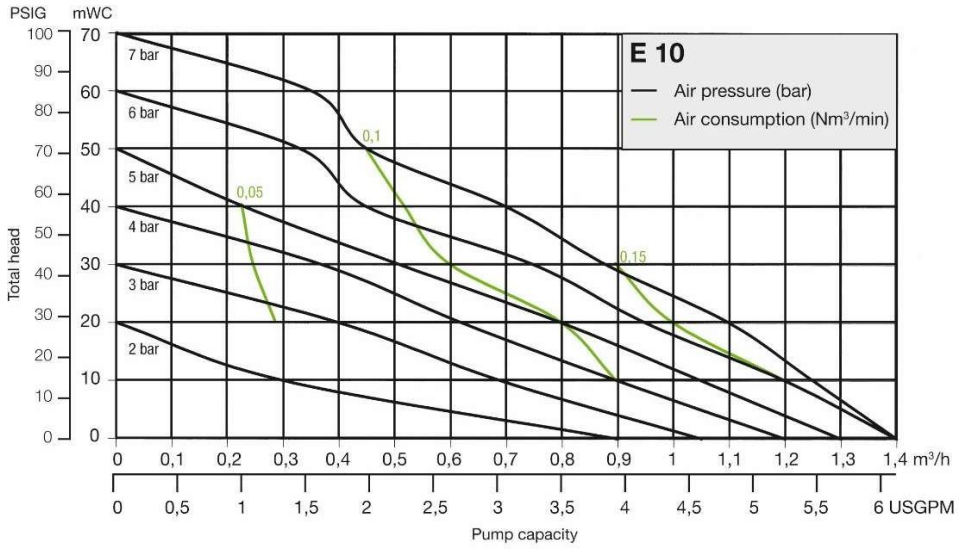

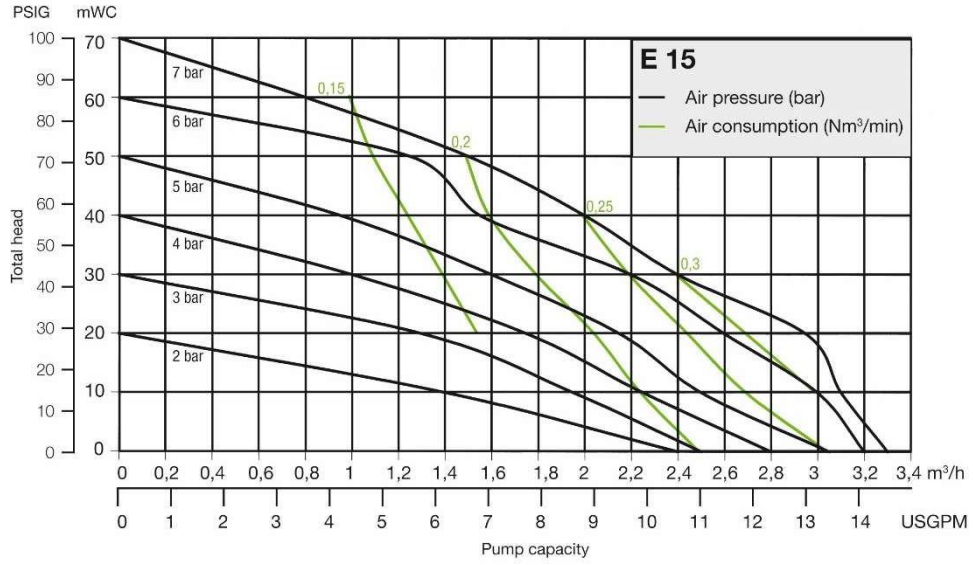

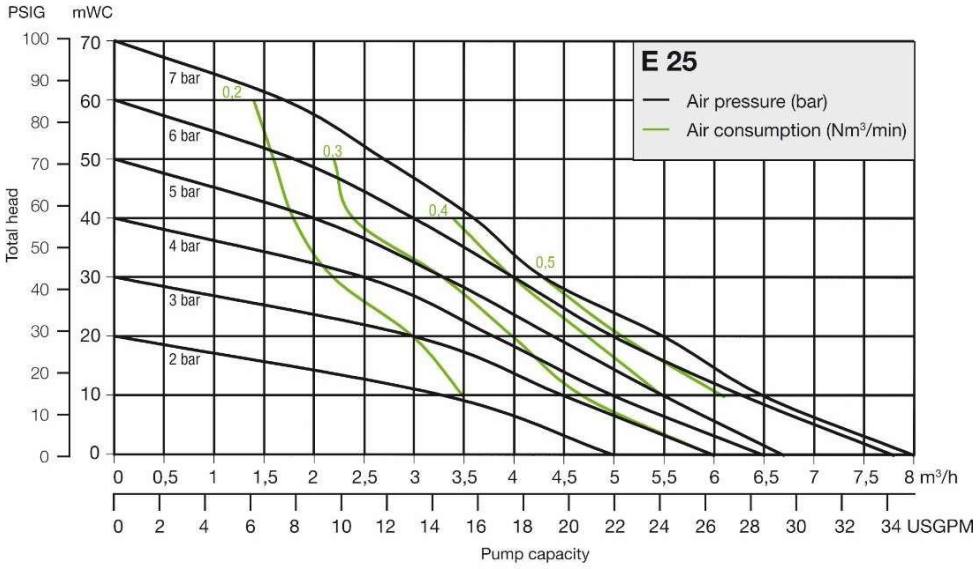
E 25
Air pressure (bar)
Air consumption (Nm³/min)
PSIG
mWC
Total head
7 bar
6 bar
5 bar
4 bar
3 bar
2 bar
0,2
0,3
0,4
0,5
0 0,5 1 1,5 2 2,5 3 3,5 4 4,5 5 5,5 6 6,5 7 7,5 8 m³/h
0 2 4 6 8 10 12 14 16 18 20 22 24 26 28 30 32 34 USGPM
Pump capacity

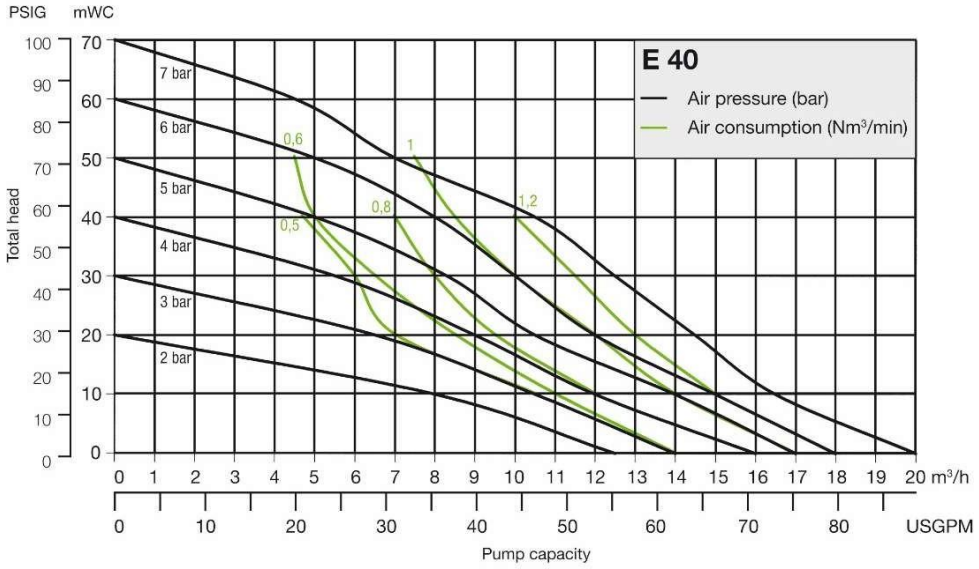
E 40
Air pressure (bar)
Air consumption (Nm³/min)
PSIG
mWC
Total head
7 bar
6 bar
5 bar
4 bar
3 bar
2 bar
0,6
0,5
0,8
1
1,2
0 1 2 3 4 5 6 7 8 9 10 11 12 13 14 15 16 17 18 19 20 m³/h
0 10 20 30 40 50 60 70 80 USGPM
Pump capacity

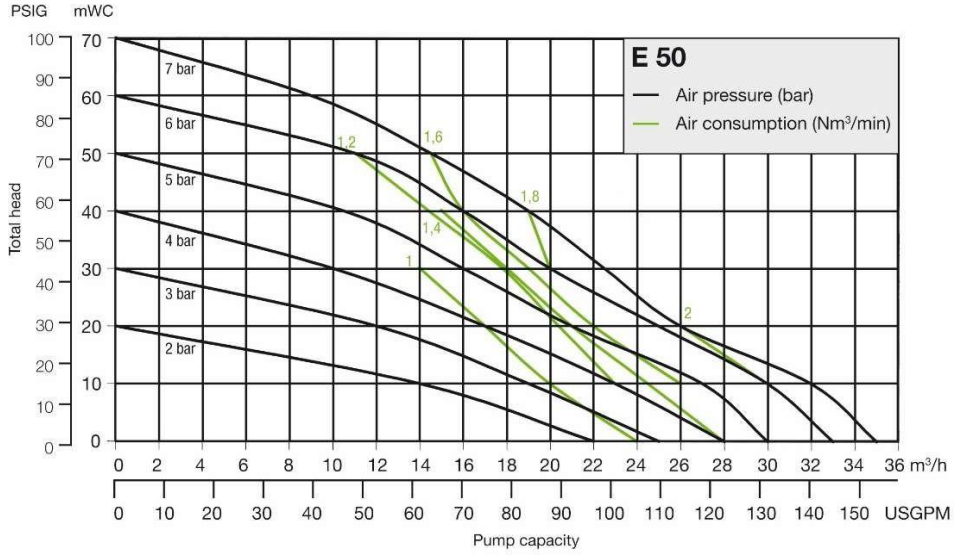
E 50
Air pressure (bar)
Air consumption (Nm³/min)
PSIG
mWC
Total head
7 bar
6 bar
5 bar
4 bar
3 bar
2 bar
1,2
1,6
1,8
1,4
1
2
0 2 4 6 8 10 12 14 16 18 20 22 24 26 28 30 32 34 36 m³/h
0 10 20 30 40 50 60 70 80 90 100 110 120 130 140 150 USGPM
Pump capacity

Installation

Recommended installation method

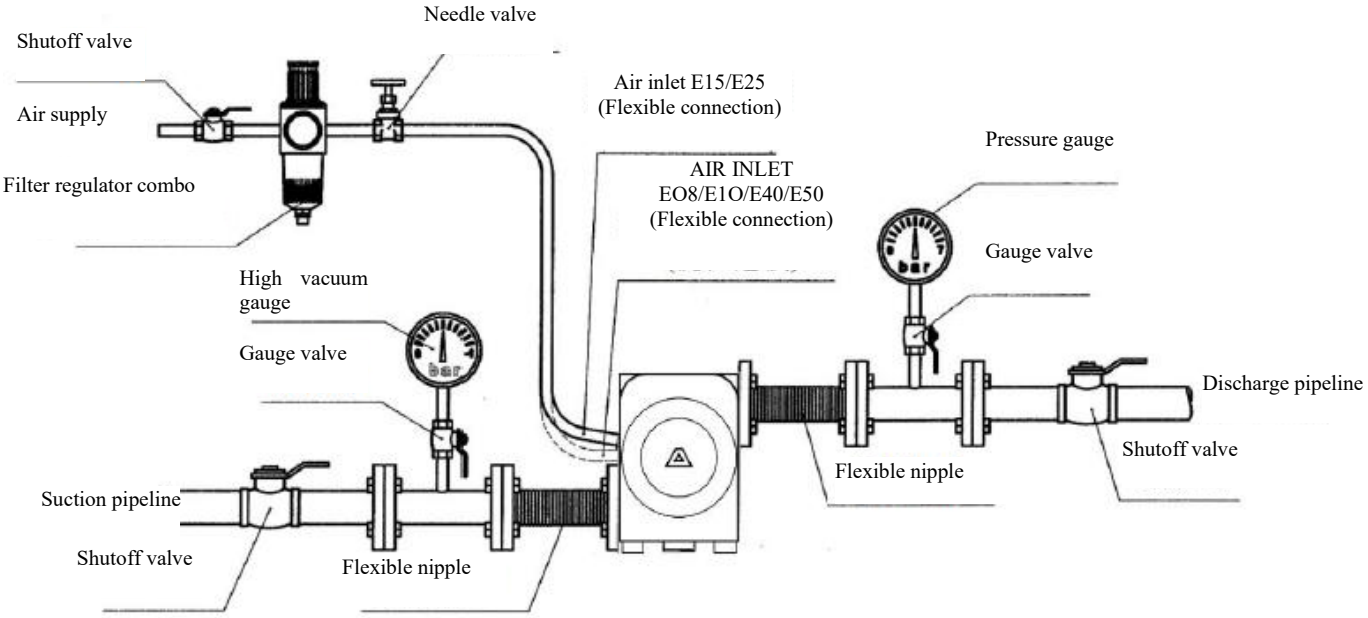

Pump nozzle

The pump nozzle is located on the Center housing [4]. Configurations with different nozzle directions are available (only for models without threaded pulsation damper). When E series pumps are delivered, the standard configuration of the nozzle features a horizontal suction port at the bottom and a horizontal discharge port at the top (as shown in Figure 8.1).

Other configuration methods are as follows:

- The suction port is vertical at the bottom of the housing, and the discharge port is horizontal at the top (as shown in Figure 8.2). In order to achieve this configuration, just remove the screw plug [13] of the Center housing and fasten it to the standard horizontal suction port.
- The suction port is horizontally located at the bottom, and the discharge port is vertically at the top of the housing (as shown in Figure 8.3). Loosen the bolt [19] of the housing, remove the Side housing [1], rotate the Center housing [4] by 180°, reassemble the pump, and change the installation position of [13].

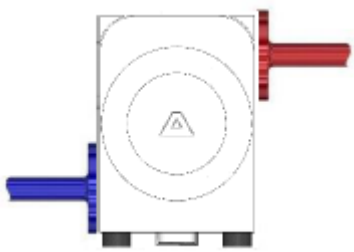

Figure 8.1

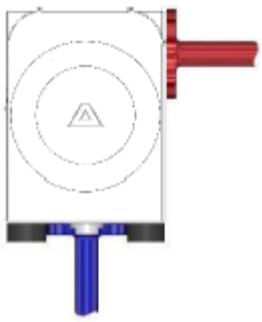

Figure 8.2

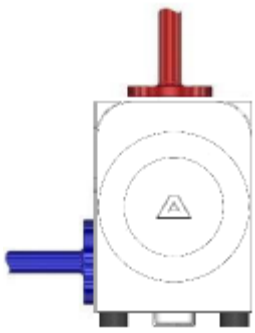

Figure 8.3

Installation, operation and maintenance

Ultraviolet radiation can damage the housing parts made of PE (material codes E and F). Usually, the pump shall be connected under no load conditions. Ignoring this may lead to leakage or even damage to the seal. To avoid vibration, it is suggested to use a pulsation damper and a compensator. Before connecting the pump, remove the yellow sealing caps from the pump suction port and discharge port on the Center housing [4] and the air inlet [23]. The bilingual safety instruction label on the air inlet should be removed first. The inlet and outlet threads of plastic ALMATEC air-operated diaphragm pump feature tapered internal threads. Use thread sealant with caution, otherwise it may damage the connection threads.

The operator is responsible for ensuring that the pipes are stable and reliably fixed according to current standards. In order to facilitate installation and maintenance, shutoff valves shall be installed before and behind the pump. The nominal size of the connecting pipe shall be selected according to the nozzle size of the pump. If the pipe diameter is too small, it may lead to cavitation (in the suction pipe) and increase pipe loss (in the suction and discharge pipes). If the pipe diameter is too large, it will reduce the dry vacuum capacity of the pump. The suction pipe should be connected to the lower connection of the Center housing [4] and carefully sealed. If it is a hose, it shall be properly protected. If the suction pipe rises towards the suction port of the pump, air blockage will occur at the suction port of the pump, thus affecting the suction performance of the pump.

For corrosive fluids requiring higher purity, we recommend purging the pump with a special fluid before start-up (and after maintenance) to remove any impurities that may remain inside the pump, preventing contamination of the pumping system.

The air inlet [23] is located at the center of the Center housing [4]. When the pump is shipped from the factory, this inlet is covered with an easily removable bilingual safety instruction label. Before installation, please ensure that there are no solid impurities in the air supply pipe. In order to ensure that the pump has a sufficient air supply, the diameter of the air supply pipe shall match the size of the pump inlet. Be cautious during the connection to prevent dust or solid particles from entering the pump, as these impurities may accumulate inside the pump and cause malfunctions. An air filter [24] (except for E08 and E10 sizes) is installed behind the air inlet [23] to prevent large particles from entering the pump.

The integrated air control system *PERSWING P*®[26] is a precision control system that requires oil-free, dry and clean compressed air for optimal functioning. If there may be moisture in the compressed air, an air-water separator or an air dryer must be equipped to prevent the pump from being blocked by ice. The ideal condition is that the dew point of the compressed air is as low as -20°C (-4°F). In humid environments, ice may form on the outside of the pump, even if the compressed air is very dry. In such cases, the exhaust pipe (about 500 mm (20 inches), either a hard or soft pipe) can be extended to delay ice formation. When the pump is installed in front of a baffle or inside a cabinet, it shall be ensured that cold air does not stagnate behind the muffler. If the exhaust outlet is prone to ice formation, preheating the compressed air to increase the dew point is an effective solution. However, it needs to be noted that the temperature of compressed air should generally not exceed 50°C (122°F) to prevent expansion and adhesion of compressed air.

The pressure of compressed air shall be controlled within a reasonable range to meet the required performance. Excessive pressure will increase air consumption and pump wear. Pump performance is controlled by adjusting the flow rate of compressed air. For low performance, it is recommended to use a needle valve for fine adjustment. For unloaded pump, it is recommended to start slowly (for example, using a needle valve). The E series pumps are self-priming during dry running, so there is no need to prime the suction port. At lower speeds, the pumps perform better when dry-primed compared to higher speeds. The suction capacity improves significantly when the pump is primed.

This pump shall be operated at slower speeds during dry operation. High-speed dry running will lead to premature wear. The pump can run shortly (up to one hour) with the outlet fully closed. It shall be noted that throttling on the suction side may damage the pump. When the pump stops running by closing the outlet side, ensure that the pressure on both sides of the diaphragm is balanced. This can be achieved by keeping the pump connected to the compressed air. For longer stoppages, the pressure on both the liquid and air sides of the pump must be relieved.

Torque values

Before starting the pump and after several hours of operation, it is suggested to tighten the housing bolt [19], the discharge valve plug [9] and the plug seat [11/13] according to the torque data in the table below. This is because the pump parts may creep under alternating stress.

These parts shall also be checked and retightened after shutdown, temperature changes, transport, or after disassembling the pump. For large temperature fluctuations or significant temperature difference between the medium and the environment, it is suggested to check the tightening torque of the pump casing bolts more frequently. The table below gives the recommended torque specification of housing bolts, the damper housing bolts (Suitable for use with ET series pulsation dampeners) and the optional flange connections (option code F3/F4/F5).

Pump specification	E 08	E 10	E 15	E 25	E 40	E 50
Torque value of housing bolts - Nm (ft lbs):						
PE PUMP	-	-	8,5 (6.3)	14 (10.3)	18 (13.3)	23 (17)
PTFE PUMP	2 (1.5)	4,5 (3.3)	6,5 (4.8)	11 (8.1)	15 (11.1)	19 (14)

Damper specifications	ET 10	ET 15	ET 25	ET 40	ET 50
Torque value of damper bolt - Nm (ft lbs):					
PE Damper	-	3 (2.2)	6 (4.4)	10 (7.4)	11 (8.1)
PTFE Damper	2 (1.5)	3 (2.2)	6 (4.4)	10 (7.4)	11 (8.1)

Pump specification	E 15	E 25	E 40	E 50
Torque value of flange connection - Nm (ft lbs):	4 (3)	5 (3.7)	12 (8.9)	15 (11.1)

Safety tips

- Only qualified personnel can install, operate and maintain this product.
- Before starting the pump, operators shall be familiar with the instructions in the troubleshooting section (see pages 19-20). Only in this way can faults be identified and corrected quickly when they occur. Faults that cannot be fixed or that remain unexplained shall be fed back to the manufacturer.
- Before carrying out any maintenance or repairs on the pump or its optional accessories, the whole device must be turned off and prevented from being turned on accidentally. This can be achieved by using a lockable pump air supply emergency stop device. In addition, a hazard sign prohibiting restarting shall be attached.
- The pressure test of the system where the pump is located can only be performed when both pump ports are disconnected with the test pipeline, or by using the pressure generated when the pump is running. Direct testing with external pressure may cause damage to the pump.
- Air-operated diaphragm pump (AODD pump) must not be operated with positive at inlet pressure.
- If the diaphragm ruptures, the pumped medium may leak through the muffler (in this case, the muffler must be replaced). To enhance safety, it is suggested to use an optional equipment such as a diaphragm monitoring system or isolation chamber system.
- If the diaphragm ruptures, the pumped medium may enter the air side of the pump. In more severe cases, for example, when the pump remains pressurized after the air supply is stopped, the pumped medium may enter the air supply pipeline. To protect other equipment (such as pulsation dampers or pneumatic valves), it is suggested to install protection devices such as check valves on the air supply pipeline to prevent the air supply pipeline from being polluted.
- The condition of the muffler shall be checked regularly, as a blocked muffler may be forced out by the pressure of the pump. If this occurs, it may cause property damage and/or personal injury.
- If the medium is prone to sedimentation, the pump must be flushed regularly. For larger solid

particles, a filter must be installed in the suction port pipeline.

- When pumping hot liquids, do not allow the pump to remain stopped for extended periods while filled with hot liquid, as this can cause temporary leakage around the valves and block the air control system.
- Relevant valid safety recommendations must be observed.
- The area around the pump should be checked for hazardous liquids, and safety measures shall be taken if necessary.
- Chemical or biological reactions (mixing of different substances) and freezing of the pumped medium in the pump chamber must be avoided.
- Before disassembling the pump, please make sure that the pump has been drained and flushed. If applicable, close and drain the outlet and inlet pipes. In addition, all power sources on both the air supply and pump sides must be cut off. If the pump is to be sent back for repair, include a note indicating the pumped medium, which can be downloaded as a template from the Almatec website.
- For conveying corrosive, hazardous or toxic liquids, please follow the relevant additional safety recommendations (e.g., wearing appropriate protective equipment according to the safety data sheet for the liquid). Even after multiple flushings, liquid may still remain behind the diaphragm, in the air source control system area and in the muffler after the diaphragm rupture. Therefore, it is essential to wear appropriate protective equipment in strict accordance with the safety data sheet of the liquid.
- Additional suggestion for sensitive fluids: By selecting appropriate materials, all wetted parts of the pump can be made suitable for the fluid, including those compatible with food contact. However, a malfunction may cause the fluid to come into contact with parts that it would not contact during regular operation (e.g., inside the air supply control system). Therefore, we suggest that this batch of products should be discarded after a malfunction when the medium is a sensitive fluid. Please note that food contact compliance only applies to the wetted parts themselves, and is not equivalent to "hygienic pump construction".
- Before restarting the pump, be sure to check the tightness of the pump.
- When lifting or assembling air-operated diaphragm pumps, abrasions may happen, therefore appropriate accessories and safety equipment must be used. When transporting or replacing large or heavy parts, they must be securely fixed on the lifting equipment.
- When transporting valuable media, wearing parts, such as diaphragms, shall be replaced during preventive maintenance.
- The use of non-original ALMATEC spare parts or structural modifications will immediately void the warranty. When using such pump, there may be a risk of damage to property and/or personnel.
- Nitrogen can be used as the driving gas source of the pump. In this case, sufficient ventilation must be provided in confined spaces.
- Electrical connections (such as when using optional equipment with a controller) must only be made by qualified personnel and must comply with the respective manufacturer’s regulations.
- During any operation, it must be ensured that there is no risk of explosion. It is recommended to use appropriate safety equipment.
- The pump has been subject to water test before shipment, possibly with some water left. If the transported medium may react with water, please contact PSG customer service for consultation in advance.
- Pump return procedure: According to the requirements of our ISO14001 system, any product sent back to ALMATEC factory for diagnosis or repair must be accompanied with a completed decontamination form. Otherwise it will not be processed. The decontamination form is included in this manual. Please pay attention to further safety regulations.

Notes on submerged installation

If the E series pump is used as a submersible pump, please pay attention to the following suggestions: When the air-operated diaphragm pump is immersed in water, the exhaust port must be led out of the liquid surface with a pipe to ensure smooth exhaust of the pump. The pump must be arranged vertically for proper operation. Small leaks in the intake or exhaust pipes may cause the air valve to be blocked. During shutdown, ensure that the pump is disconnected from system pressure.

When installing, ensure that all external parts, even those that do not contact the medium during standard operation, such as covers, shock absorbers, connectors, etc., be compatible with the pumping medium. In addition, it shall be noted that the weight of the pump will be reduced due to different materials. If this happens, ensure appropriate fixings are in place.

Additional tips for operating temperature

The temperature and pressure limits listed on page 5 are only based on the mechanical temperature limits of the housing material. According to the nature of the liquid transported, the maximum safe operating temperature of the housing material may be lower.

In general, below 0°C (32°F), elastic materials in the pump become brittle and wear more quickly. Regarding the housing material, please note that PE (not PP) retains its mechanical properties at low temperature, while PTFE can still maintain its mechanical stability over a wider temperature range. Therefore, ALMATEC E series pumps can operate safely at low temperatures. However, when conveying medium below 0°C (32°F), the wear on internal parts will increase. In addition, freezing, caking or crystallization of the liquid in the pump must be avoided. Using a drain system (model number suffix R) will help prevent such problems.

Please note that the viscosity and specific gravity of most media will change with the temperature (typically increasing as the temperature decreases). Depending on the application, this may lead to the decrease of pumping flow, or even failure to pump media with high viscosity or high specific gravity.

In applications with significant temperature changes, the preload of the housing bolts needs to be monitored carefully, as the temperature change will affect the actual preload due to the different thermal expansion coefficients of different materials.

Replacement parts

We recommend that users be provided with the "S" spare parts kit on site, which contains spare related parts of the pump. For repairs and/or preventive maintenance, only original spare parts of ALMATEC should be used. Failing to do so will invalidate the CE and ATEX markings, the declaration of conformity, and the pump's warranty claims.

All repairs to the pump must be carried out by trained professionals using appropriate tools.

Maintenance

Only the original spare parts of ALMATEC shall be used for repair and/or preventive maintenance. Failing to do so will invalidate the CE and ATEX markings, the declaration of conformity, and the pump's warranty claims.

All repairs to the pump must be carried out by trained professionals using appropriate tools.

Required tools

The overall design of ALMATEC E series pump is simple and straightforward. We recommend referring to the exploded view to identify the individual parts using the part numbers listed below. Each pump is shipped with two tools: one plastic tool for installing the air valve [26] and the other for installing the valve seat [16]. No other special tools are required.

	List of tools	**Pump specification**	**E 08**	**E 10**	**E 15**	**E 25**	**E 40**	**E 50**
Part number	**PART NAME**	**Tool name**	**Tool specification**	**Tool specification**	**Tool specification**	**Tool specification**	**Tool specification**	**Tool specification**
8	Thread bolt	Slotted screwdriver	*0,8 x 5,0*	*0,8 x 5,0*	*0,8 x 5,0*	*1,0 x 5,5*	*1,6 x 8,0*	*1,6 x 8,0*
9	Valve stop, discharge valve	Double pin wrench	4 mm	5 mm	6 mm	8 mm	8 mm	10 mm
11	Plug, side housing	Double pin wrench	4 mm	5 mm	6 mm	8 mm	8 mm	10 mm
13	Plug, center housing	Open-end wrench	24 mm	24 mm	30 mm	46 mm	60 mm	65 mm
16	Valve seat	ALMATEC professional tools *	2 08 K01 10	2 10 K01 10	2 15 K01 10	2 25 K01 10	2 40 K01 10	2 50 K01 10
19	Housing bolt	Open-end/torx or socket wrench	7 mm	8 mm	10 mm	13 mm	13 mm	17 mm
21	Shaft screw	Allen wrench	-	-	5 mm	6 mm	8 mm	10 mm
23	AIR INLET	Open-end wrench	13 mm	13 mm	19 mm	19 mm	27 mm	27 mm
26	Air Valve	ALMATEC proprietary tools *+ torx wrench	1 08 K01 54 19 mm		1 15 K01 54 24 mm			

"*" means that the tool is included in the box with each pump.

The double pin wrench looks like the following:

Disassembly

When disassembling the pump, be sure to follow the work flow and safety precautions described on pages 10-13. The only difference between the different sizes of the E series (E15 to E50) is the number of Housing bolts [19]. Additionally, for the E08 and E10 sizes, the Shaft [20] also serves as the pilot piston for the air valve. In both E08 and E10 pumps, there are no Shaft piston rings [22], set screws [21], or air filters [24]. Please keep these structural differences in mind when reading the following disassembly instructions.

Figure 14.1

Take out the cover [3] from the Side housing [1] to expose the Housing bolts [19]. Use two socket wrenches to loosen the housing nuts [19] on one side. First, remove the tension disc [2], and then remove the Side housing [1]. Be careful not to damage the sealing surface in contact with the diaphragm. Carefully remove the Housing bolt nut [19] from the pump, and remove the second tension disc [2]. Now remove the Center housing [4] and the Side housings [1] on both sides. Remove the sleeve [5] from the Side housing [1]. Remove the O-rings [6] from the Center housing [4] and the Side housings [1] on both sides, and determine whether to replace them.

To further disassemble the Side housing [1], use a double-pin wrench (Figure 14.1) to unscrew the Valve stop, discharge valve [9]. Alternatively, loosen the valve stopper [9] by inserting two Housing bolts [19] into the holes of the valve stopper [9], and then inserting the third Housing bolt [19] between them. Remove the valve ball [15] (or the plunger [15], depending on the pump type) and the O-ring [10].

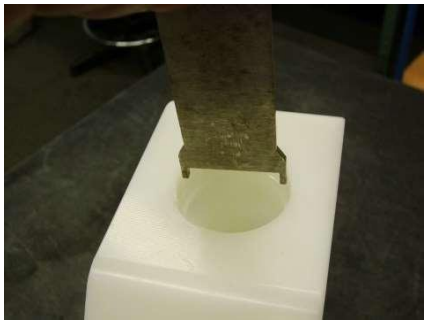

Figure 14.2

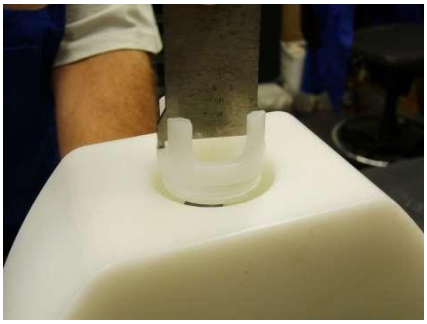

Figure 14.3

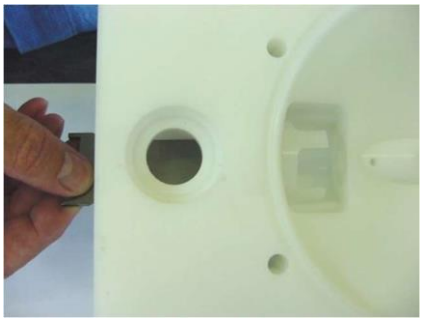

Figure 14.4

Refer to Figures 14.2 and 14.3 to unscrew the valve seat [16] with a special metal tool. Remove the screw plug [11] on the Side housing according to the disassembly method of the valve stopper [9]. Be sure to protect the O-ring [12] on the screw plug. Unscrew the valve stopper screw [8] with a slotted screwdriver, remove the Lock bolt [7], and then remove the valve ball or plunger [15]. Adjust the metal special tool, refer to Figure 14.1 and screw the valve seat [16] into the Side housing [1]. At this time, remove the valve seat [16] from the inside of the Side housing.

Figure 14.5

Turn the diaphragm [18] counterclockwise to remove it from the transmission shaft [20], and then pull the other diaphragm [18] out of the Center housing [4] together with the transmission shaft [20]. Remove the fixing screw stud [21] on the diaphragm [18] with an Allen wrench (see Figure 14.5). Carefully take out the piston ring [22] from the corresponding grooves on both sides of the Center housing [4] with a hook (see Figure 14.6). Be careful not to damage the Center housing [4]. The removed piston ring [22] cannot be used and must be replaced with a new one. Remove the muffler[25], air inlet interface [23] and air filter [24] from the Center housing [4]. When removing the PERSWING P® valve [26], please use the special plastic tool provided with the pump to remove the end covers on both sides (see Figure 14.7). Remove the main piston and the pilot piston, and press out the air valve housing by hand when turning the plastic special tool (see Figure 14.8).

Figure 14.6

Figure 14.7

Figure 14.8

You can refer to the E series pump disassembly video on our website as follows:

https://www.psgdover.com/de/almatec/download-library/videos

Assembly

The reassembly process of parts is basically the opposite of the disassembly process. Here are some additional reference information.

For the installation of the PERSWING P® air valve [26], first, screw one end cover into the Center housing [4] smoothly. Insert one (of the six) O-ring [27] (for air valve housing) into the end cover from the inside. Moisten the four O-rings [27] of the air valve housing with a small amount of water, and then gently push the housing into the Center housing [4] with a disassembly tool. Be careful to make sure it slides in gently, and do not hit the housing violently with a hammer. If the housing is skewed or difficult to insert, remove it completely and start all over. Insert the main piston and pilot piston. Place the sixth O-ring [27] on the edge of the air valve housing and screw in the second end cover.

Figure 15.1

When installing new piston rings [22] (only for pump sizes E 15 - E 50), carefully pinch them into a waist shape with circlip pliers, then insert the rings into the grooves in the Center housing [4] (see Fig. 15.1); and press the rings completely and smoothly into the grooves with a round tool.

Screw the retaining screw [21] into the diaphragm and tighten it. Use the retaining screw [21] to completely fix the diaphragm [18] on the transmission shaft [20]. Adjust the hole in the Center housing [4] so that it is aligned with the diaphragm on both sides (turn it backwards slightly if necessary). The sealing surfaces of the diaphragm and the Side housing [1] must be absolutely clean and undamaged. Even tiny scratches may lead to leakage (if necessary, carefully grind the surface of the housing with fine sandpaper).

When assembling the Housing bolt [19], please note that the lengths of the threads on both sides are different. Push a spring washer on one side of the shorter thread and tighten the nut to the stop position.

Carefully push the O-ring sleeve [6] into the Side housing [1] and the Center housing [4] (avoid bending the O-ring! If necessary, slightly moisten and gently twist the O-ring). When installing the Valve stop, discharge valve [9], carefully insert the O-ring [10] into the Side housing [1] first, and do not push the O-ring onto the valve stopper [9]. Make sure that the O-ring is in direct contact with the horizontal surface of the thread end (if necessary, press it in with a suitable round bar).

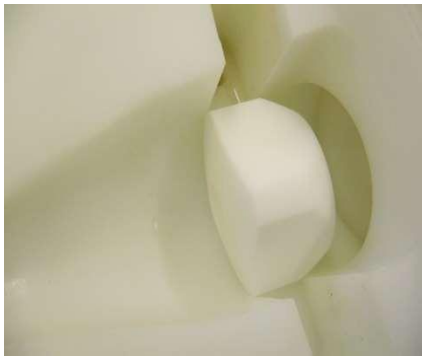

Figure 15.2

When installing the Cylinder valveensure to put the flat side of the plunger [15] into the valve seat [16] first (see Figure 15.2). Then insert the Lock bolt [7] and fix it with the Thread bolt [8]. Put two diaphragms [18] into the Center housing [4] through the transmission shaft [20], put on the Side housing [1] and the tension disc [2], and fix their positions with the Housing bolts [19]. After that, fasten another group of Side housing [1] and tension disc [2] together with the Center housing [4] through the Housing bolts [19] (turning the studs slightly is helpful for them to pass through the housing smoothly). Be careful not to damage the diaphragm [18]. According to the given torque value, fix the Housing bolts [19] evenly until the torque value given in the manual is reached. Further tightening bolts can not improve the sealing performance, but may deform the housing! Before putting the pump back into operation, be sure to check the tightness of the pump and the torque value of the bolt.

There is a video about the assembly of E series pump on our website.

https://www.psgdover.com/de/almatec/download-library/videos

Trouble Shooting

Fault	POSSIBLE REASON	Solution/Remarks
Pump does not run	Air supply pipe is blocked or closed muffler blocked Pump chamber is blocked Air valve defect Discharge pipeline is blocked or closed	Unblock or open the air supply pipeline Clean or replace muffler remove blockage Replace the air valve Unblock or open the discharge pipeline
Pump operates unsteadily	piston rings worn Air valve is worn diaphragm rupture Air valve is polluted check valve blocked icing	replace piston rings replace air control system Replace the diaphragm and clean the pump Clean or replace the air valve Clean and remove the blockages Improve the air source system
Air in the medium	Air leakage in the suction pipeline The liquid in the storage tank has been drained The empty diaphragm is broken Cavitation	Seal the suction pipeline. Fill the tank or replace it with a new one Replace the diaphragm and clean the pump Adjust the suction height or install the pressurized air chamber at the pump inlet
Insufficient discharge pressure	Low pressure or insufficient supply of air source air supply line leaky Air source system leakage wear of the check valves There are many air-consuming parts	Increase the pressure of air source or increase the air supply Check or repair the air supply pipeline Replace the air valve Replace the check valve Increase the pressure of air source or increase the air supply
Flow reduction	There is dirt in the air valve icing Air pressure drop There is dirt in the suction pipeline or inlet strainer There is dirt in the discharge pipeline or outlet strainer muffler blocked wear of the check valves Medium viscosity changes There are many air-consuming parts	Clean or replace the air valve Improve air source: dry or filter it, etc. Increase the pressure of air source or increase the air supply cleaning cleaning replace the muffler Replace the check valve Restore the medium viscosity or adjust pump installation height Increase the pressure of air source or increase the air supply
Pump stops automatically	Air valve has ice Air source pressure is too low Air source pressure drops discharge line blocked Air source filter is blocked valve closed Air valve failure Wear or leakage of air valve diaphragm rupture check valve blocked	Improve air source: dry or filter it, etc. Increase the pressure of air source Ensure sufficient air supply Clean the discharge pipeline Clean the air source filter open valve Replace the air valve Replace the air valve Replace the diaphragm and clean the pump Clean or replace the check valve

Fault	POSSIBLE REASON	Solution/Remarks
The pump is running, but with insufficient suction	The pump runs too fast The working condition exceeds the self-priming capacity of the pump Cavitation The working condition exceeds the performance range of the pump There is an air bag in the suction or discharge pipe Back pressure dry start-up The valve or filter in the suction pipeline is blocked The valve or filter in the discharge pipeline is blocked The liquid in the storage tank has been drained There is vacuum in the storage tank wear of the check valves suction line leaky suction line blocked check valve blocked	Reduce the operating frequency of the pump Adjust the pump installation height Check and cool the pumping medium Adjust the installation height of the pump or replace it with a pump of a larger specification Exhaust the air in the pipeline Fill the pump and eliminate back pressure Open the valve or clean the filter Open the valve or clean the filter Fill the tank or replace it with a new one Inflate the container Replace the check valve Sealed or repaired suction pipe clean suction line Clean or replace the check valve
Insufficient suction after pump repair	The joint is not completely tightened Check valve is not installed properly or is wrong	Tighten or seal the joint Correct the installation of check valve
Diaphragm overstretching	There is pressure in the pump or system There is abnormal vacuum in the pump icing	Make sure that the pressure only comes from the pump itself, and check the equipment or valve and replace the diaphragm check suction line, open valve Improve the air source
There is a leak between the housings	Housing bolts are loose O-ring of sleeve is damaged Diaphragm is corroded Diaphragm overstretching Pump or pipeline has installation stress	Check and tighten it Replace O-rings replace diaphragms replace diaphragms Release and eliminate installation stress: Add expansion joint
Muffler turns gray	Air source has high humidity and ice	Improve the quality of gas source
Muffler turns black	There is oil pollution in the air source	Improve the quality of gas source Install a high-precision filter in the intake pipeline
The pump is connected to the air source, but it does not run	Air valve is blocked There are large particles or dirt in the pump or air circuit Chemical corrosion (o-ring swelling) Discharge pipeline valve is closed	Clean or replace the air valve Clean the pump, replace the parts that need to be replaced, and improve the quality of air source Check and replace the damaged parts open valve
The medium flows out of the muffler	diaphragm rupture	Replace the diaphragm and clean the pump

List of Spare Parts

Pump code EEE–ETZ, housing material: PE

Size				E 15 E..	E 25 E..	E 40 E..	E 50 E..
Item	**Pc.**	**Description**	**Material**	**Part-No.**	**Part-No.**	**Part-No.**	**Part-No.**
1	2	Side housing	PE	7 15 A10 51	7 25 A10 51	7 40 A10 51	7 50 A10 51
2	*2*	*Tension disc*	*1.4301*	*7 15 A08 22*	*7 25 A08 22*	*7 40 A08 22*	*7 50 A08 22*
3	*2*	*Cover*	*PE*	*7 15 009 51*	*7 25 009 51*	*7 40 009 51*	*7 50 009 51*
4	1	Center housing	PE	7 15 A11 51	7 25 A11 51	7 40 A11 51	7 50 A11 51
5	4	Sleeve	PE	2 15 A12 51	2 25 A12 51	2 40 A12 51	2 50 A12 51
6	8	O-ring, sleeve, code EE.	EPDM	9 20 A31 72	9 33 A32 72	9 50 A33 72	9 62 A34 72
		O-ring, sleeve, code EN.	NBR	9 20 A31 71	9 33 A32 71	9 50 A33 71	-
		O-ring. sleeve, code ET.	FEP/FKM	9 20 A31 59	9 33 A32 59	9 50 A33 59	9 62 A34 59
7	2	Lock bolt	PE	7 15 A13 51	7 25 A13 51	7 40 A13 51	7 50 A13 51
8	4	Thread bolt	PE	2 15 A14 51	2 25 A14 51	2 40 A14 51	2 40 A14 51
9	2	Valve stop, discharge valve	PE	7 15 A15 51	7 25 A15 51	7 40 A15 51	7 50 A15 51
10	2	O-ring, valve stop discharge valve, code EE.	EPDM	9 24 A25 72	9 38 A26 72	9 57 A27 72	9 76 A28 72
		O-ring, valve stop discharge valve, code EN.	NBR	9 24 A25 71	9 38 A26 71	9 57 A27 71	-
		O-ring, valve stop discharge valve, code ET.	FEP/FKM	9 24 A25 59	9 38 A26 59	9 57 A27 59	9 76 A28 59
11	2	Plug, side housing	PE	7 15 A17 51	7 25 A17 51	7 40 A17 51	7 50 A17 51
12	2	O-ring, plug side housing, code EE.	EPDM	9 25 A10 72	9 40 A13 72	9 62 A34 72	9 79 D53 72
		O-ring, plug side housing, code EN.	NBR	9 25 A10 71	9 40 A13 71	9 62 A34 71	-
		O-ring, plug side housing, code ET.	FEP/FKM	9 25 A10 59	9 40 A13 59	9 62 A34 59	9 79 D53 59
13	1	Plug, center housing	PE	7 15 A19 51	7 25 A19 51	7 40 A19 51	7 50 A19 51
14	1	O-ring, plug center housing, code EE.	EPDM	9 33 A32 72	9 50 A33 72	9 62 A34 72	9 73 A35 72
		O-ring, plug center housing, code EN.	NBR	9 33 A32 71	9 50 A33 71	9 62 A34 71	-
		O-ring, plug center housing, code ET.	FEP/FKM	9 33 A32 59	9 50 A33 59	9 62 A34 59	9 73 A35 59
15	4	Cylinder valve, code E.Z	PTFE	7 15 A16 60	7 25 A16 60	7 40 A16 60	7 50 A16 60
		Ball valve, code E.E	EPDM	1 15 A32 72	1 25 A32 72	1 40 A32 72	1 50 A32 72
		Ball valve, code E.N	NBR	1 15 A32 71	1 25 A32 71	1 40 A32 71	-
		Ball valve, code E.S	SS	1 15 A32 22	1 25 A32 22	-	-
		Ball valve, code E.T	PTFE	1 15 A32 60	1 25 A32 60	1 40 A32 60	1 50 A32 60
16	4	Valve seat, ball valves	PE	2 15 A18 51	2 25 A18 51	2 40 A18 51	2 50 A18 51
		Valve seat, cylinder valves	PE	7 15 A18 51	7 25 A18 51	7 40 A18 51	7 50 A18 51
17	*4*	*Shock absorbers*	*NR*	*1 15 A22 85*	*1 15 A22 85*	*1 40 A22 85*	*1 40 A22 85*
18	2	Diaphragm, code EE.	EPDM	1 15 031 72	1 25 031 72	1 40 031 72	1 50 031 72
18	2	Diaphragm, code EN.	NBR	1 15 031 70	1 25 031 70	1 40 031 70	-
		Diaphragm, code ET.	PTFE	1 15 031 67	1 25 031 67	1 40 031 67	1 50 031 67
19	***	*Housing bolt, cpl.*	*1.4305*	*7 15 A20 22*	*7 25 A20 22*	*7 40 A20 22*	*7 50 A20 22*
20	*1*	*Shaft*	*1.4301*	*2 15 A30 22*	*2 25 A30 22*	*2 40 A30 22*	*2 50 A30 22*
21	*2*	*Set screw, shaft*	*1.4305*	*9 10 A20 22*	*9 12 A21 22*	*9 16 A22 22*	*9 20 A23 22*
22	*2*	*Shaft piston ring, cpl.*	*PTFE*	*1 15 041 64*	*1 25 041 64*	*1 40 041 64*	*1 50 041 64*
23	*1*	*Air inlet*	*PETP*	*1 15 A47 84*	*1 15 A47 84*	*1 40 A47 84*	*1 40 A47 84*
24	*1*	*Air filter*	*PE*	*1 15 043 51*	*1 15 043 51*	*1 40 043 51*	*1 40 043 51*
25	*1*	*Muffler, cpl.*	*PE*	*1 15 244 51*	*1 15 244 51*	*1 40 244 51*	*1 50 244 51*
26	*1*	*PERSWING P® air control system, cpl.*	*PETP*	*2 15 001 84*	*2 15 001 84*	*2 40 001 84*	*2 50 201 84*
*27***	*6*	*O-ring, air valve housing*	*NBR*	*9 35 504 71*	*9 35 504 71*	*9 46 515 71*	*9 66 533 71*
* E 15 and E 25: 6 pieces; E 40 and E 50: 8 pieces ** included in item 26							

All parts in italics are non-wetted parts.

Please refer to page 4 for the pump model description.

Please specify the ex-factory serial number of the pump when ordering.

For the list of spare parts for special equipment, please refer to page 28 and subsequent pages.

Pump code TEE - TTZ, housing material: PTFE

Size				E 08 T..	E 10 T..	E 15 T..	E 25 T..	E 40 T..	E 50 T..
Item	**Pc.**	**Description**	**Material**	**Part-No.**	**Part-No.**	**Part-No.**	**Part-No.**	**Part-No.**	**Part-No.**
1	2	Side housing	PTFE	7 08 A10 60	7 10 A10 60	7 15 A10 60	7 25 A10 60	7 40 A10 60	7 50 A10 60
2	*2*	*Tension disc*	*1.4301*	*7 08 A08 22*	*7 10 A08 22*	*7 15 A08 22*	*7 25 A08 22*	*7 40 A08 22*	*7 50 A08 22*
3	*2*	*Cover*	*PE*	*7 08 009 51*	*7 10 009 51*	*7 15 009 51*	*7 25 009 51*	*7 40 009 51*	*7 50 009 51*
4	1	Center housing	PTFE	7 08 A11 60	7 10 A11 60	7 15 A11 60	7 25 A11 60	7 40 A11 60	7 50 A11 60
5	4	Sleeve	PTFE	2 08 A12 60	2 10 A12 60	2 15 A12 60	2 25 A12 60	2 40 A12 60	2 50 A12 60
6	8	O-ring, sleeve, code TE.	EPDM	-	9 15 A30 72	9 20 A31 72	9 33 A32 72	9 50 A33 72	9 62 A34 72
		O-ring, sleeve, code TN.	NBR	-	-	9 20 A31 71	9 33 A32 71	9 50 A33 71	-
		O-ring. sleeve, code TT.	FEP/FKM	9 12 A29 59	9 15 A30 59	9 20 A31 59	9 33 A32 59	9 50 A33 59	9 62 A34 59
7	2	Lock bolt	PTFE	7 08 A13 60	7 10 A13 60	7 15 A13 60	7 25 A13 60	7 40 A13 60	7 50 A13 60
8	4	Thread bolt	PTFE	7 08 A14 60	7 08 A14 60	2 15 A14 60	2 25 A14 60	2 40 A14 60	2 40 A14 60
9	2	Valve stop, discharge valve	PTFE	7 08 A15 60	7 10 A15 60	7 15 A15 60	7 25 A15 60	7 40 A15 60	7 50 A15 60
10	2	O-ring, valve stop discharge valve:							
		- code TE.	EPDM	-	9 19 A24 72	9 24 A25 72	9 38 A26 72	9 57 A27 72	9 76 A28 72
		- code TN.	NBR	-	-	9 24 A25 71	9 38 A26 71	9 57 A27 71	-
		- code TT.	FEP/FKM	9 16 A23 59	9 19 A24 59	9 24 A25 59	9 38 A26 59	9 57 A27 59	9 76 A28 59
11	2	Plug, side housing	PTFE	7 08 A17 60	7 10 A17 60	7 15 A17 60	7 25 A17 60	7 40 A17 60	7 50 A17 60
12	2	O-ring, plug side housing, code TE.	EPDM	-	9 20 A02 72	9 25 A10 72	9 40 A13 72	9 62 A34 72	9 79 D53 72
		O-ring, plug side housing, code TN.	NBR	-	-	9 25 A10 71	9 40 A13 71	9 62 A34 71	-
		O-ring, plug side housing, code TT.	FEP/FKM	9 14 A78 59	9 20 A02 59	9 25 A10 59	9 40 A13 59	9 62 A34 59	9 79 D53 59
13	1	Plug, center housing	PTFE	7 08 A19 60	7 10 A19 60	7 15 A19 60	7 25 A19 60	7 40 A19 60	7 50 A19 60
14	1	O-ring, plug center housing:							
		- code TE.	EPDM	-	9 20 A31 72	9 33 A32 72	9 50 A33 72	9 62 A34 72	9 73 A35 72
		- code TN.	NBR	-	-	9 33 A32 71	9 50 A33 71	9 62 A34 71	-
		- code TT.	FEP/FKM	9 20 A31 59	9 20 A31 59	9 33 A32 59	9 50 A33 59	9 62 A34 59	9 73 A35 59
15	4	Cylinder valve, code T.Z	PTFE	7 08 A16 60	7 10 A16 60	7 15 A16 60	7 25 A16 60	7 40 A16 60	7 50 A16 60
		Ball valve, code T.E	EPDM	1 08 A32 72	1 10 A32 72	1 15 A32 72	1 25 A32 72	1 40 A32 72	1 50 A32 72
		Ball valve, code T.N	NBR	-	-	1 15 A32 71	1 25 A32 71	1 40 A32 71	-
		Ball valve, code T.S	SS	1 08 A32 22	1 10 A32 22	1 15 A32 22	-	-	-
		Ball valve, code T.T	PTFE	1 08 A32 60	1 10 A32 60	1 15 A32 60	1 25 A32 60	1 40 A32 60	1 50 A32 60
16	4	Valve seat, ball valves	PTFE	2 08 A18 60	2 10 A18 60	2 15 A18 60	2 25 A18 60	2 40 A18 60	2 50 A18 60
		Valve seat, cylinder valves	PTFE	7 08 A18 60	7 10 A18 60	7 15 A18 60	7 25 A18 60	7 40 A18 60	7 50 A18 60
17	*4*	*Shock absorbers*	*NR*	*1 08 A22 85*	*1 08 A22 85*	*1 15 A22 85*	*1 15 A22 85*	*1 40 A22 85*	*1 40 A22 85*
18	2	Diaphragm, code TE.	EPDM	-	1 10 031 72	1 15 031 72	1 25 031 72	1 40 031 72	1 50 031 72
		Diaphragm, code TN.	NBR	-	-	1 15 031 70	1 25 031 70	1 40 031 70	-
		Diaphragm, code TT.	PTFE	1 08 031 67	1 10 031 67	1 15 031 67	1 25 031 67	1 40 031 67	1 50 031 67
19	*	*Housing bolt, cpl.*	*1.4305*	*7 08 A20 22*	*7 10 A20 22*	*7 15 A20 22*	*7 25 A20 22*	*7 40 A20 22*	*7 50 A20 22*
20	*1*	*Shaft*	*1.4301*	*2 08 A30 22***	*2 08 A30 22***	*2 15 A30 22*	*2 25 A30 22*	*2 40 A30 22*	*2 50 A30 22*
21	*2*	*Set screw, shaft*	*1.4305*	-	-	*9 10 A20 22*	*9 12 A21 22*	*9 16 A22 22*	*9 20 A23 22*
22	*2*	*Shaft piston ring, cpl.*	*PTFE*	-	-	*1 15 041 64*	*1 25 041 64*	*1 40 041 64*	*1 50 041 64*
23	*1*	*Air inlet*	*PETP*	*1 08 A47 84*	*1 08 A47 84*	*1 15 A47 84*	*1 15 A47 84*	*1 40 A47 84*	*1 40 A47 84*
24	*1*	*Air filter*	*PE*	-	-	*1 15 043 51*	*1 15 043 51*	*1 40 043 51*	*1 40 043 51*
25	*1*	*Muffler, cpl.*	*PE*	*1 08 244 51*	*1 08 244 51*	*1 15 244 51*	*1 15 244 51*	*1 40 244 51*	*1 50 244 51*
26	*1*	*PERSWING P® air control system, cpl.*	*PETP*	*2 08 001 84*	*2 08 001 84*	*2 15 001 84*	*2 15 001 84*	*2 40 001 84*	*2 50 201 84*
*27***	*6*	*O-ring, air valve housing*	*NBR*	*9 26 519 71*	*9 26 519 71*	*9 35 504 71*	*9 35 504 71*	*9 46 515 71*	*9 66 533 71*
* E 08 and E 10: 4 pieces; E 15 and E 25: 6 pieces; E 40 and E 50: 8 pieces ** included in item 26									

All parts in italics are non-wetted parts.
Please refer to page 4 for the pump model description.
Please specify the ex-factory serial number of the pump when ordering.
For the list of spare parts for special equipment, please refer to page 28 and subsequent pages.

Pump code FEE - FTZ, housing material: Conductive PE

Size				E 15 F..	E 25 F..	E 40 F..	E 50 F..
Item	**Pc.**	**Description**	**Material**	**Part-No.**	**Part-No.**	**Part-No.**	**Part-No.**
1	2	Side housing	PE conductive	7 15 A10 55	7 25 A10 55	7 40 A10 55	7 50 A10 55
2	*2*	*Tension disc*	*1.4301*	*7 15 A08 22*	*7 25 A08 22*	*7 40 A08 22*	*7 50 A08 22*
3	*2*	*Cover*	*PE conductive*	*7 15 009 55*	*7 25 009 55*	*7 40 009 55*	*7 50 009 55*
4	1	Center housing	PE conductive	7 15 A11 55	7 25 A11 55	7 40 A11 55	7 50 A11 55
5	4	Sleeve	PE conductive	2 15 A12 55	2 25 A12 55	2 40 A12 55	2 50 A12 55
6	8	O-ring, sleeve, code FE.	EPDM	9 20 A31 72	9 33 A32 72	9 50 A33 72	9 62 A34 72
		O-ring, sleeve, code FN.	NBR	9 20 A31 71	9 33 A32 71	9 50 A33 71	-
		O-ring. sleeve, code FT.	FEP/FKM	9 20 A31 59	9 33 A32 59	9 50 A33 59	9 62 A34 59
7	2	Lock bolt	PE conductive	7 15 A13 55	7 25 A13 55	7 40 A13 55	7 50 A13 55
8	4	Thread bolt	PE	2 15 A14 51	2 25 A14 51	2 40 A14 51	2 40 A14 51
9	2	Valve stop, discharge valve	PE conductive	7 15 A15 55	7 25 A15 55	7 40 A15 55	7 50 A15 55
10	2	O-ring, valve stop discharge valve, code FE.	EPDM	9 24 A25 72	9 38 A26 72	9 57 A27 72	9 76 A28 72
		O-ring, valve stop discharge valve, code FN.	NBR	9 24 A25 71	9 38 A26 71	9 57 A27 71	-
		O-ring, valve stop discharge valve, code FT.	FEP/FKM	9 24 A25 59	9 38 A26 59	9 57 A27 59	9 76 A28 59
11	2	Plug, side housing	PE conductive	7 15 A17 55	7 25 A17 55	7 40 A17 55	7 50 A17 55
12	2	O-ring, plug side housing, code FE.	EPDM	9 25 A10 72	9 40 A13 72	9 62 A34 72	9 79 D53 72
		O-ring, plug side housing, code FN.	NBR	9 25 A10 71	9 40 A13 71	9 62 A34 71	-
		O-ring, plug side housing, code FT.	FEP/FKM	9 25 A10 59	9 40 A13 59	9 62 A34 59	9 79 D53 59
13	1	Plug, center housing	PE conductive	7 15 A19 55	7 25 A19 55	7 40 A19 55	7 50 A19 55
14	1	O-ring, plug center housing, code FE.	EPDM	9 33 A32 72	9 50 A33 72	9 62 A34 72	9 73 A35 72
		O-ring, plug center housing, code FN.	NBR	9 33 A32 71	9 50 A33 71	9 62 A34 71	-
		O-ring, plug center housing, code FT.	FEP/FKM	9 33 A32 59	9 50 A33 59	9 62 A34 59	9 73 A35 59
15	4	Cylinder valve, code F.Z	PTFE	7 15 A16 60	7 25 A16 60	7 40 A16 60	7 50 A16 60
		Ball valve, code F.E	EPDM	1 15 A32 72	1 25 A32 72	1 40 A32 72	1 50 A32 72
		Ball valve, code F.N	NBR	1 15 A32 71	1 25 A32 71	1 40 A32 71	-
		Ball valve, code F.S	SS	1 15 A32 22	1 25 A32 22	-	-
		Ball valve, code F.T	PTFE	1 15 A32 60	1 25 A32 60	1 40 A32 60	1 50 A32 60
16	4	Valve seat, ball valves	PE conductive	2 15 A18 55	2 25 A18 55	2 40 A18 55	2 50 A18 55
		Valve seat, cylinder valves	PE conductive	7 15 A18 55	7 25 A18 55	7 40 A18 55	7 50 A18 55
17	*4*	*Shock absorbers*	*NR*	*1 15 A22 85*	*1 15 A22 85*	*1 40 A22 85*	*1 40 A22 85*
18	2	Diaphragm, code FE.	EPDM	1 15 031 72	1 25 031 72	1 40 031 72	1 50 031 72
		Diaphragm, code FN.	NBR	1 15 031 70	1 25 031 70	1 40 031 70	-
		Diaphragm, code FT.	PTFE	1 15 031 67	1 25 031 67	1 40 031 67	1 50 031 67
19	***	*Housing bolt, cpl.*	*1.4305*	*7 15 A20 22*	*7 25 A20 22*	*7 40 A20 22*	*7 50 A20 22*
20	*1*	*Shaft*	*1.4301*	*2 15 A30 22*	*2 25 A30 22*	*2 40 A30 22*	*2 50 A30 22*
21	*2*	*Set screw, shaft*	*1.4305*	*9 10 A20 22*	*9 12 A21 22*	*9 16 A22 22*	*9 20 A23 22*
22	*2*	*Shaft piston ring, cpl.*	*PTFE*	*1 15 041 64*	*1 25 041 64*	*1 40 041 64*	*1 50 041 64*
23	*1*	*Air inlet*	*PETP*	*1 15 A47 84*	*1 15 A47 84*	*1 40 A47 84*	*1 40 A47 84*
24	*1*	*Air filter*	*PE*	*1 15 043 51*	*1 15 043 51*	*1 40 043 51*	*1 40 043 51*
25	*1*	*Muffler, cpl.*	*Bz*	*1 15 244 34*	*1 15 244 34*	*1 40 244 34*	*1 40 244 34*
26	*1*	*PERSWING P® air control system, cpl.*	*PETP*	*2 15 001 84*	*2 15 001 84*	*2 40 001 84*	*2 50 201 84*
*27***	*6*	*O-ring, air valve housing*	*NBR*	*9 35 504 71*	*9 35 504 71*	*9 46 515 71*	*9 66 533 71*
* E 15 and E 25: 6 pieces; E 40 and E 50: 8 pieces ** included in item 26							

All parts in italics are non-wetted parts.

Please refer to page 4 for the pump model description. Please specify the ex-factory serial number of the pump when ordering.

For the list of spare parts for special equipment, please refer to page 28 and subsequent pages.

Pump code UEE - UTZ, housing material: PTFE Conductive

Size				E 08 U..	E 10 U..	E 15 U..	E 25 U..	E 40 U..	E 50 U..
Item	**Pc.**	**Description**	**Material**	**Part-No.**	**Part-No.**	**Part-No.**	**Part-No.**	**Part-No.**	**Part-No.**
1	2	Side housing	PTFE cond.	7 08 A10 65	7 10 A10 65	7 15 A10 65	7 25 A10 65	7 40 A10 65	7 50 A10 65
2	*2*	*Tension disc*	*1.4301*	*7 08 A08 22*	*7 10 A08 22*	*7 15 A08 22*	*7 25 A08 22*	*7 40 A08 22*	*7 50 A08 22*
3	*2*	*Cover*	*PE conductive*	*7 08 009 55*	*7 10 009 55*	*7 15 009 55*	*7 25 009 55*	*7 40 009 55*	*7 50 009 55*
4	1	Center housing	PTFE cond.	7 08 A11 65	7 10 A11 65	7 15 A11 65	7 25 A11 65	7 40 A11 65	7 50 A11 65
5	4	Sleeve	PTFE cond.	2 08 A12 65	2 10 A12 65	2 15 A12 65	2 25 A12 65	2 40 A12 65	2 50 A12 65
6	8	O-ring, sleeve, code UE. O-ring, sleeve, code UN. O-ring. sleeve, code UT.	EPDM NBR FEP/FKM	- - 9 12 A29 59	9 15 A30 72 - 9 15 A30 59	9 20 A31 72 9 20 A31 71 9 20 A31 59	9 33 A32 72 9 33 A32 71 9 33 A32 59	9 50 A33 72 9 50 A33 71 9 50 A33 59	9 62 A34 72 - 9 62 A34 59
7	2	Lock bolt	PTFE cond.	7 08 A13 65	7 10 A13 65	7 15 A13 65	7 25 A13 65	7 40 A13 65	7 50 A13 65
8	4	Thread bolt	PTFE cond.	7 08 A14 65	7 08 A14 65	2 15 A14 65	2 25 A14 65	2 40 A14 65	2 40 A14 65
9	2	Valve stop, discharge valve	PTFE cond.	7 08 A15 65	7 10 A15 65	7 15 A15 65	7 25 A15 65	7 40 A15 65	7 50 A15 65
10	2	O-ring, valve stop discharge valve: - code UE. - code UN. - code UT.	 EPDM NBR FEP/FKM	- - 9 16 A23 59 7 08 A17 65	9 19 A24 72 - 9 19 A24 59 7 10 A17 65	9 24 A25 72 9 24 A25 71 9 24 A25 59 7 15 A17 65	9 38 A26 72 9 38 A26 71 9 38 A26 59 7 25 A17 65	9 57 A27 72 9 57 A27 71 9 57 A27 59 7 40 A17 65	9 76 A28 72 - 9 76 A28 59 7 50 A17 65
11	2	Plug, side housing	PTFE cond.						
12	2	O-ring, plug side housing: - code UE. - code UN. - code UT.	 EPDM NBR FEP/FKM	- - 9 14 A78 59 7 08 A19 65	9 20 A02 72 - 9 20 A02 59 7 10 A19 65	9 25 A10 72 9 25 A10 71 9 25 A10 59 7 15 A19 65	9 40 A13 72 9 40 A13 71 9 40 A13 59 7 25 A19 65	9 62 A34 72 9 62 A34 71 9 62 A34 59 7 40 A19 65	9 79 D53 72 - 9 79 D53 59 7 50 A19 65
13	1	Plug, center housing	PTFE cond.						
14	1	O-ring, plug center housing: - code UE. - code UN. - code UT.	 EPDM NBR FEP/FKM	- - 9 20 A31 59 7 08 A16 60	9 20 A31 72 - 9 20 A31 59 7 10 A16 60	9 33 A32 72 9 33 A32 71 9 33 A32 59 7 15 A16 60	9 50 A33 72 9 50 A33 71 9 50 A33 59 7 25 A16 60	9 62 A34 72 9 62 A34 71 9 62 A34 59 7 40 A16 60	9 73 A35 72 - 9 73 A35 59 7 50 A16 60
15	4	Cylinder valve, code U.Z Ball valve, code U.E Ball valve, code U.N Ball valve, code U.S Ball valve, code U.T	PTFE EPDM NBR SS PTFE	1 08 A32 72 - 1 08 A32 22 1 08 A32 60 2 08 A18 65	1 10 A32 72 - 1 10 A32 22 1 10 A32 60 2 10 A18 65	1 15 A32 72 1 15 A32 71 1 15 A32 22 1 15 A32 60 2 15 A18 65	1 25 A32 72 1 25 A32 71 - 1 25 A32 60 2 25 A18 65	1 40 A32 72 1 40 A32 71 - 1 40 A32 60 2 40 A18 65	1 50 A32 72 - - 1 50 A32 60 2 50 A18 65
16	4	Valve seat, ball valves Valve seat, cylinder valves	PTFE cond. PTFE cond.	7 08 A18 65 *1 08 A22 85*	7 10 A18 65 *1 08 A22 85*	7 15 A18 65 *1 15 A22 85*	7 25 A18 65 *1 15 A22 85*	7 40 A18 65 *1 40 A22 85*	7 50 A18 65 *1 40 A22 85*
17	*4*	*Shock absorbers*	*NR*	-	1 10 031 72	1 15 031 72	1 25 031 72	1 40 031 72	1 50 031 72
18	2	Diaphragm, code UE. Diaphragm, code UN. Diaphragm, code UT.	EPDM NBR PTFE	- 1 08 031 67 *7 08 A20 22*	- 1 10 031 67 *7 10 A20 22*	1 15 031 70 1 15 031 67 *7 15 A20 22*	1 25 031 70 1 25 031 67 *7 25 A20 22*	1 40 031 70 1 40 031 67 *7 40 A20 22*	- 1 50 031 67 *7 50 A20 22*
19	*	*Housing bolt, cpl.*	*1.4305*	*2 08 A30 22***	*2 08 A30 22***	*2 15 A30 22*	*2 25 A30 22*	*2 40 A30 22*	*2 50 A30 22*
20	*1*	*Shaft*	*1.4301*	-	-	*9 10 A20 22*	*9 12 A21 22*	*9 16 A22 22*	*9 20 A23 22*
21	*2*	*Set screw, shaft*	*1.4305*	-	-	*1 15 041 64*	*1 25 041 64*	*1 40 041 64*	*1 50 041 64*
22	*2*	*Shaft piston ring, cpl.*	*PTFE*	*1 08 A47 84*	*1 08 A47 84*	*1 15 A47 84*	*1 15 A47 84*	*1 40 A47 84*	*1 40 A47 84*
23	*1*	*Air inlet*	*PETP*	-	-	*1 15 043 51*	*1 15 043 51*	*1 40 043 51*	*1 40 043 51*
24	*1*	*Air filter*	*PE*	*1 08 244 51*	*1 08 244 51*	*1 15 244 34*	*1 15 244 34*	*1 40 244 34*	*1 40 244 34*
25	*1*	*Muffler, cpl.*	*PE/Bz*	*2 08 001 84*	*2 08 001 84*	*2 15 001 84*	*2 15 001 84*	*2 40 001 84*	*2 50 201 84*
26	*1*	*PERSWING P® air control system, cpl.*	*PETP*	*9 26 519 71*	*9 26 519 71*	*9 35 504 71*	*9 35 504 71*	*9 46 515 71*	*9 66 533 71*
*27***	*6*	*O-ring, air valve housing*	*NBR*	*9 26 519 71*	*9 26 519 71*	*9 35 504 71*	*9 35 504 71*	*9 46 515 71*	*9 66 533 71*

* E 08 and E 10: 4 pieces; E 15 and E 25: 6 pieces; E 40 and E 50: 8 pieces ** included in item 26

All parts in italics are non-wetted parts.

Please refer to page 4 for the pump model description.

Please specify the ex-factory serial number of the pump when ordering.

For the list of spare parts for special equipment, please refer to page 28 and subsequent pages.

Pump code TTT - USP - TTZ - USP, housing material: PTFE

Size				E 08 TTT-USP	E 10 TTT-USP	E 15 TTT-USP	E 25 TTT-USP	E 40 TTT-USP	E 50 TTT-USP
				E 08 TTZ-USP	E 10 TTZ-USP	E 15 TTZ-USP	E 25 TTZ-USP	E 40 TTZ-USP	E 50 TTZ-USP
Item	**Pc.**	**Description**	**Materials**	**Part-No.**	**Part-No.**	**Part-No.**	**Part-No.**	**Part-No.**	**Part-No.**
1	2	Side housing	PTFE	7 08 A10 60	7 10 A10 60	7 15 A10 60	7 25 A10 60	7 40 A10 60	7 50 A10 60
2	*2*	*Tension disc*	*304*	*7 08 A08 22*	*7 10 A08 22*	*7 15 A08 22*	*7 25 A08 22*	*7 40 A08 22*	*7 50 A08 22*
3	*2*	*Cover*	*PE*	*7 08 009 51*	*7 10 009 51*	*7 15 009 51*	*7 25 009 51*	*7 40 009 51*	*7 50 009 51*
4	1	Center housing	PTFE	7 08 A11 60	7 10 A11 60	7 15 A11 60	7 25 A11 60	7 40 A11 60	7 50 A11 60
5	4	Sleeve	PTFE	2 08 A12 69	2 10 A12 69	2 15 A12 69	2 25 A12 69	2 40 A12 69	2 50 A12 69
6	8	O-ring, sleeve, (code TT)	FEP/FKM	9 12 A29 59 7 08 A13 60	9 15 A30 59 7 10 A13 60	9 20 A31 59 7 15 A13 60	9 33 A32 59 7 25 A13 60	9 50 A33 59 7 40 A13 60	9 62 A34 59 7 50 A13 60
7	2	Lock bolt	PTFE	7 08 A14 60	7 08 A14 60	2 15 A14 60	2 25 A14 60	2 40 A14 60	2 40 A14 60
8	4	Thread bolt	PTFE	7 08 A15 60	7 10 A15 60	7 15 A15 60	7 25 A15 60	7 40 A15 60	7 50 A15 60
9	2	Valve stop, discharge valve	PTFE	9 16 A23 59	9 19 A24 59	9 24 A25 59	9 38 A26 59	9 57 A27 59	9 76 A28 59
10	2	O-ring, Valve stop, discharge valve, (code TT)	FEP/FKM	7 08 A17 60	7 10 A17 60	7 15 A17 60	7 25 A17 60	7 40 A17 60	7 50 A17 60
11	2	Plug, side housing	PTFE	9 14 A78 59	9 20 A02 59	9 25 A10 59	9 40 A13 59	9 62 A34 59	9 79 D53 59
12	2	O-ring, Plug, side housing, (code TT)	FEP/FKM	7 08 A19 60	7 10 A19 60	7 15 A19 60	7 25 A19 60	7 40 A19 60	7 50 A19 60
13	1	Plug, center housing	PTFE	9 20 A31 59	9 20 A31 59	9 33 A32 59	9 50 A33 59	9 62 A34 59	9 73 A35 59
14	1	O-ring, Plug, center housing (code TT)	FEP/FKM	7 08 A16 60U 1 08 A32 60U	7 10 A16 60U 1 10 A32 60U	7 15 A16 60U 1 15 A32 60U	7 25 A16 60U 1 25 A32 60U	7 40 A16 60U 1 40 A32 60U	7 50 A16 60U 1 50 A32 60U
15	4	Cylinder valve(code TZ)	PTFE	2 08 A18 60 7 08 A18 60	2 10 A18 60 7 10 A18 60	2 15 A18 60 7 15 A18 60	2 25 A18 60 7 25 A18 60	2 40 A18 60 7 40 A18 60	2 50 A18 60 7 50 A18 60
		Valve ball (code TT)	PTFE	*1 08 A22 85*	*1 08 A22 85*	*1 15 A22 85*	*1 15 A22 85*	*1 40 A22 85*	*1 40 A22 85*
16	4	Ball valve seat	PTFE	1 08 031 67	1 10 031 67	1 15 031 67	1 25 031 67	1 40 031 67	1 50 031 67
		Cylinder valve seat	PTFE	*7 08 A20 22*	*7 10 A20 22*	*7 15 A20 22*	*7 25 A20 22*	*7 40 A20 22*	*7 50 A20 22*
17	*4*	*Shock absorbers*	*NR*	*2 08 A30 22***	*2 08 A30 22***	*2 15 A30 22*	*2 25 A30 22*	*2 40 A30 22*	*2 50 A30 22*
18	2	Diaphragm, code TT	PTFE	-	-	*9 10 A20 22*	*9 12 A21 22*	*9 16 A22 22*	*9 20 A23 22*
19	*	*Housing bolt*	*17-4PH*	-	-	*1 15 041 64*	*1 25 041 64*	*1 40 041 64*	*1 50 041 64*
20	*1*	*Shaft*	*304*	*1 08 A47 84*	*1 08 A47 84*	*1 15 A47 84*	*1 15 A47 84*	*1 40 A47 84*	*1 40 A47 84*
21	*2*	*Set screw, Shaft*	*304*	-	-	*1 15 043 51*	*1 15 043 51*	*1 40 043 51*	*1 40 043 51*
22	*2*	*Piston ring, Shaft*	*PTFE*	*1 08 244 51*	*1 08 244 51*	*1 15 244 51*	*1 15 244 51*	*1 40 244 51*	*1 50 244 51*
23	*1*	*AIR INLET*	*PETP*	*2 08 001 84*	*2 08 001 84*	*2 15 001 84*	*2 15 001 84*	*2 40 001 84*	*2 50 201 84*
24	*1*	*Air filter*	*PE*	*9 26 519 71*	*9 26 519 71*	*9 35 504 71*	*9 35 504 71*	*9 46 515 71*	*9 66 533 71*
25	*1*	*Muffler*	*PE*	7 08 A10 60	7 10 A10 60	7 15 A10 60	7 25 A10 60	7 40 A10 60	7 50 A10 60
26	*1*	*PERSWING P® Air Valve*	*PETP*	*7 08 A08 22*	*7 10 A08 22*	*7 15 A08 22*	*7 25 A08 22*	*7 40 A08 22*	*7 50 A08 22*
*27***	*6*	*O-ring, air valve housing*	*NBR*	*7 08 009 51*	*7 10 009 51*	*7 15 009 51*	*7 25 009 51*	*7 40 009 51*	*7 50 009 51*
*E 08 and E 10: 4 pcs; E 15 and E 25: 6 pcs; E 40 and E 50: 8 pcs; ** included in Part No.26									

All parts in italics are non-wetted parts.

Please refer to page 4 for the pump model description.

Please specify the ex-factory serial number of the pump when ordering.

For the list of spare parts for special equipment, please refer to page 28 and subsequent pages.

Exploded View of Product

Pump specification E 08 / E 10

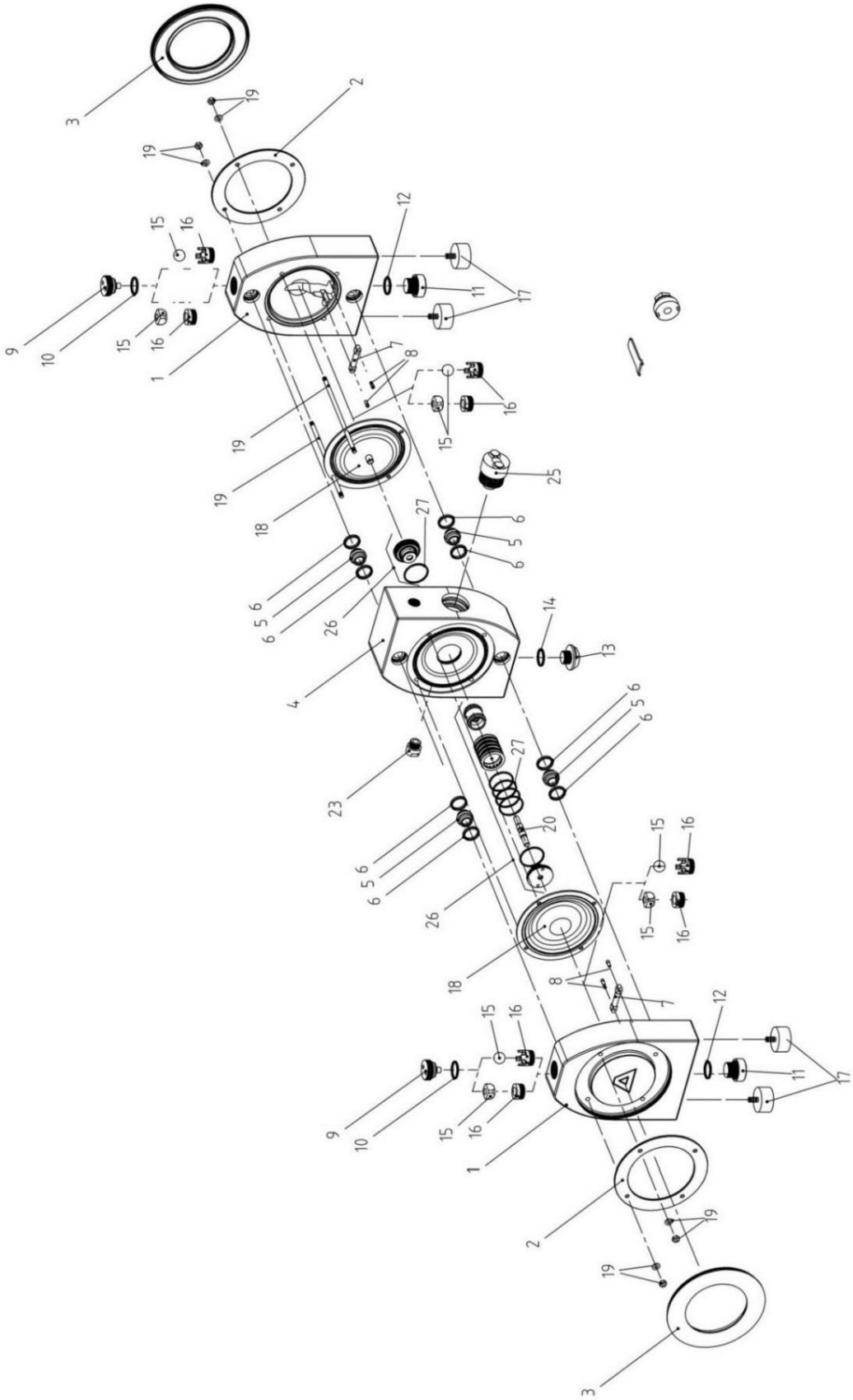

Pump specification E 15 / E 25 / E 40 / E 50

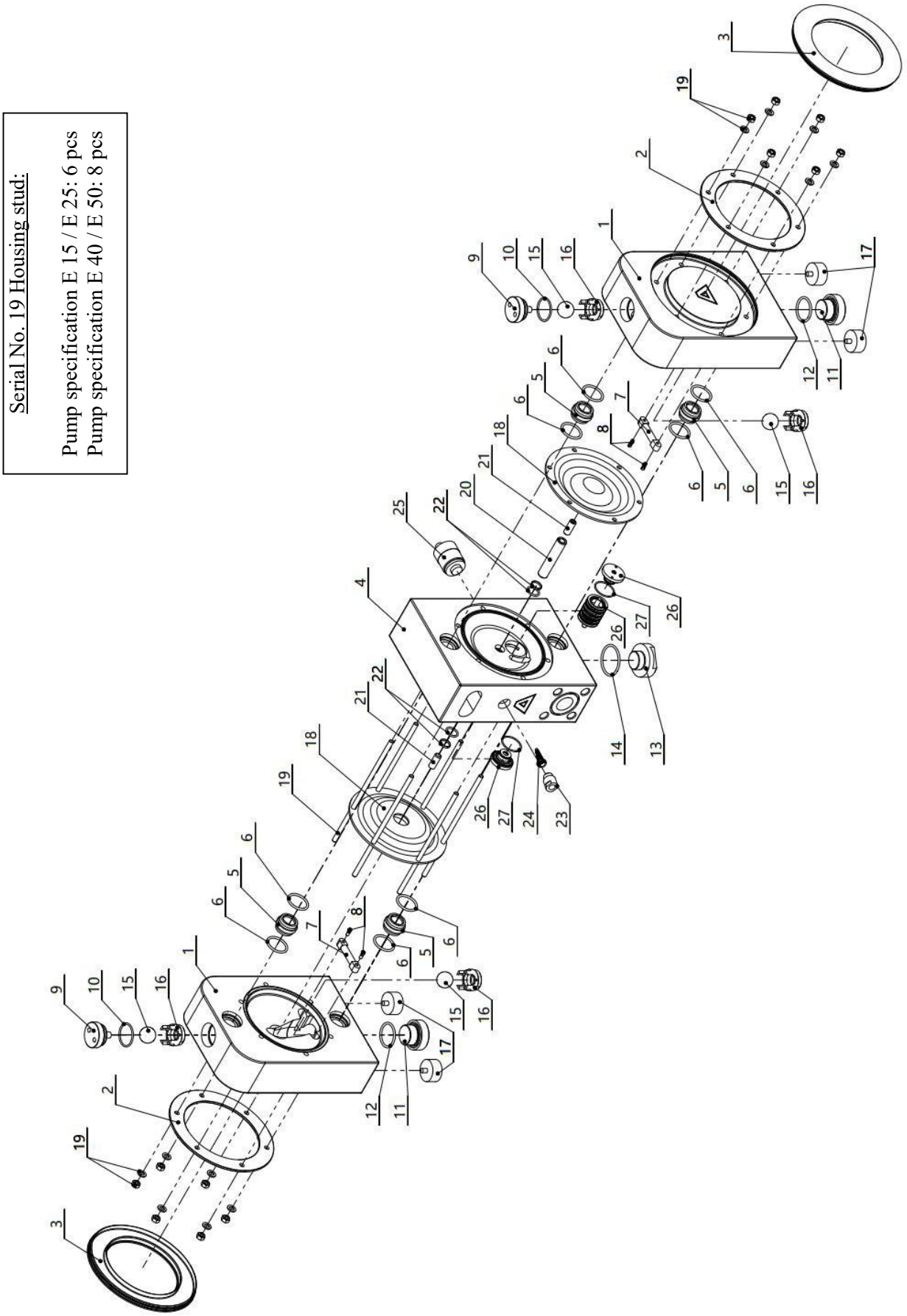

Optional Configuration

For special requirements, the ALMATEC E-Series air-operated double diaphragm pumps are available with various optional features. The pump code shows which optional features are available. The code is on the pump nameplate. Isolation chamber system (code: BS), with a separate operating manual. In the list of spare parts, all non-product contact parts are in italics.

Stroke counting system (codes C 2, C 3, C 4, C 9, C 10)

Code C2 / C3 / C4 – Capacitive Stroke Counting

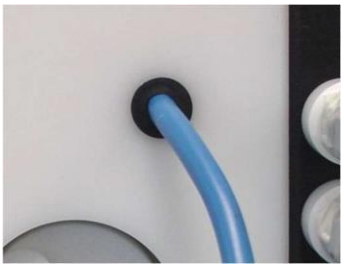

A sensor [50] is mounted on the intermediate pump housing [4] of the pump to count the strokes during operation. The sensor monitors the movement of the diaphragm without direct contact. This provides a safe monitoring system unaffected by external conditions or pump operating mode. The sensor's pulse signal can be sent to a on-site detector or stroke counter (available on request). When the stroke count reaches the preset value, the stroke counter will send a signal, which can be further processed, such as activating a solenoid valve to shut down the pump.

There are three types of stroke counting systems:

- C2 stroke sensor (Namur type): Suitable for use in explosion-proof areas.
- C3 stroke counting system: Includes a sensor and stroke counter.
- C4 stroke counting system: Includes a sensor, stroke counter, and a controller for explosion-proof areas.

If only the sensor (code C2) is included, it must be connected to an existing controller with Namur interface. For explosion protection applications (code C4), an intrinsically safe controller must be installed between the sensor and the counter. Wiring diagrams and technical parameters for these electrical parts are provided. For more detailed information, please refer to the materials provided by the manufacturers of these parts. The controller must be housed in a suitable cabinet.

Code C9 / C10 – Stroke Counting, Pneumatical

Unlike the optional configurations under codes C2-C4, the code of the pneumatic stroke counting system are designated as C9 or C10. The pressure sensor records changes in air chamber pressure behind one diaphragm of the pump and converts these pneumatic pulse signals into electrical signals.

There are two types of pneumatical stroke counting systems:

- C9 pneumatical stroke counting system, which includes:
  - Pressure sensor with 2.5m signal cable and pressure sensor plug
  - 2.5m DN 4/6m connection hose with threaded connections for 4/6 hose (pump side and sensor side)
  - Mounting bracket with screws
- C10 pneumatical stroke counting system:
  - Same as C9, but includes an additional stroke counter
- The pump with code "C8" is suitable for pneumatic stroke counting systems, featuring a factory-sealed hole for hose connection.

For installation, screw the elbow adapter (or straight adapter for E08/E10 pump) into the additional gas connection on the pump (the adapter may have been installed). The location of the air inlet varies according to the pump type and specification (see note below). Connect the adapter to the pressure switch with a hose, connect the socket to the electrical connection of the pressure switch, and connect the signal cable to the current recording device (code C9) or to the fully enclosed stroke counter (code C10). For technical parameters, electrical wiring diagrams and more detailed information, please refer to the technical data provided by the manufacturers of pressure switches and stroke counters.

!!! For optimal system performance, its air supply pressure shall not be less than 1.5 bar!

Note that the air inlet for the stroke counter system is distinct from the air inlet for the pump. The positions of these two connections are listed below according to different types and specifications of pumps.

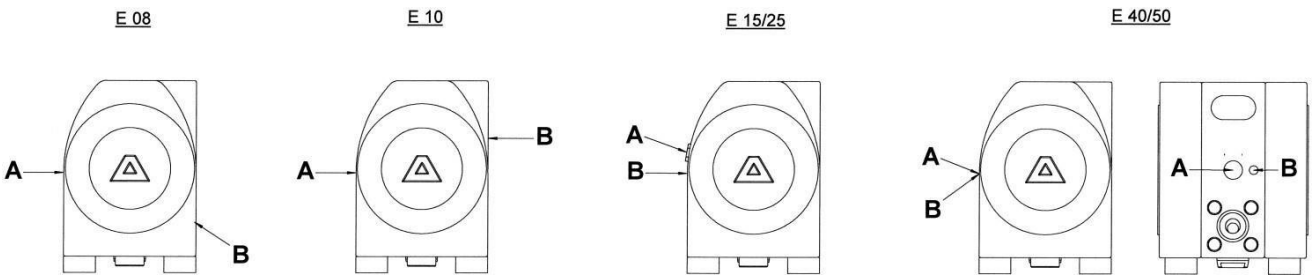

A = Air inlet of pump, and B = Air inlet of stroke counting system

Stroke Counter Spare Parts List					E 10	E 15	E 25	E 40	E 50
Code	**Item**	**Pc.**	**De**	**Materials**	**PART #**	**PART #**	**PART #**	**PART #**	**PART #**
C2	4*	1	Intermediate Pump Housing for Sensor:						
			- Code E..	PE	-	7 15 B11 51	7 25 B11 51	7 40 B11 51	7 50 B11 51
			- Code F..	Conductive PE	-	7 15 B11 55	7 25 B11 55	7 40 B11 55	7 50 B11 55
			- Code T..	PTFE	-	7 15 B11 60	7 25 B11 60	7 40 B11 60	7 50 B11 60
			- Code U..	PTFE Conductive	-	7 15 B11 65	7 25 B11 65	7 40 B11 65	7 50 B11 65
	50	*1*	*Stroke sensor, Namur*	*Part*	-	*1 00 072 99*	*1 00 072 99*	*1 00 072 99*	*1 00 072 99*
	-	*1*	*O-ring, stroke sensor*	*NBR*	-	*9 25 B35 71*	*9 25 B35 71*	*9 25 B35 71*	*9 25 B35 71*
C3			*Includes all parts in C2,*						
			With additions:						
	-	*1*	*Clamp amplifier*	*Part*	-	*1 00 171 99*	*1 00 171 99*	*1 00 171 99*	*1 00 171 99*
	-	*1*	*Stroke counter*	*Part*	-	*10007199-01*	*10007199-01*	*10007199-01*	*10007199-01*
C4			*Includes all parts in C2,*						
			With additions:						
	-	*1*	*Controller*	*Part*	-	*1 00 370 99*	*1 00 370 99*	*1 00 370 99*	*1 00 370 99*
	-	*1*	*Stroke counter*	*Part*	-	*10007199-01*	*10007199-01*	*10007199-01*	*10007199-01*
C9	4*	1	Intermediate pump housing with additional connection R ¼:						
			- Code E	PE	-	7 15 D11 51	7 25 D11 51	7 40 D11 51	7 50 D11 51
			- Code F	Conductive PE	-	7 15 D11 55	7 25 D11 55	7 40 D11 55	7 50 D11 55
			- Code T **	PTFE	7 10 D11 60	7 15 D11 60	7 25 D11 60	7 40 D11 60	7 50 D11 60
			- Code U ***	PTFE Conductive	7 10 D11 65	7 15 D11 65	7 25 D11 65	7 40 D11 65	7 50 D11 65
	-	*1*	*Elbow adapter (straight adapter for E 10)*	*PP*	*1 00 J77 51*	*1 00 J75 51*	*1 00 J75 51*	*1 00 J75 51*	*1 00 J75 51*
	-	*1*	*HOSES*	*PE*	*1 00 J76 51*	*1 00 J76 51*	*1 00 J76 51*	*1 00 J76 51*	*1 00 J76 51*
	-	*1*	*Pressure Switches*	*Part*	*1 00 972 99*	*1 00 972 99*	*1 00 972 99*	*1 00 972 99*	*1 00 972 99*
	-	*1*	*Cable socket*	*Part*	*1 00 973 99*	*1 00 973 99*	*1 00 973 99*	*1 00 973 99*	*1 00 973 99*
C10			*Includes all parts in C9,*						
			With additions:						
	-	*1*	*Stroke counter*	*Part*	*10007199-01*	*10007199-01*	*10007199-01*	*10007199-01*	*10007199-01*

* If required, the part number of the Center housing meeting the ANSI standard interface can be provided

All parts in italics are non-wetted parts.

** Pump specification E 08: 7 08 D11 60 *** Pump specification E 08: 7 08 D11 65

Diaphragm condition monitoring (additional codes D1, D3)

Although ALMATEC diaphragms with integrated metal cores offer optimal service life, they remain wear-sensitive parts. If damaged, liquid can leak into the intermediate pump housing and eventually escape through the muffler. This can be simply and effectively avoided by installing the ALMATEC diaphragm monitoring device.

A capacitive sensor is installed in the muffler [25] of the pump, which can detect any liquid that comes into contact, whether conductive or not, enabling rapid identification of diaphragm damage. However, it shall also be considered that the diaphragm monitoring system can not prevent the liquid from leaking out of the pump from the muffler. For higher safety requirements, it is recommended to select ALMATEC isolation chamber system (equipment code: BS). However, it shall be noted that high humidity in the surrounding air may cause false alarms, even if the pump air supply is dried.

There are two kinds of diaphragm monitoring systems:

- D1 diaphragm leak sensor (Namur type): Suitable for use in explosion-proof areas.
- D3 diaphragm monitoring system: Includes a sensor and controller.

The diaphragm sensor can be connected to the existing controller with a Namur interface (code D1) or to the included controller (code D3). Electrical wiring diagrams and technical parameters of the controller can be found on the controller. For more detailed information, please refer to the materials provided by the manufacturers of these parts. The controller must be housed in a suitable cabinet.

List of spare parts for diaphragm monitoring system					**E 08**	**E 10**	**E 15**	**E 25**	**E 40**	**E 50**
Code	**Serial number**	**Quantity**	**Name**	**Materials**	**PART #**	**PART #**	**PART #**	**PART #**	**PART #**	**PART #**
D1	*51*	*1*	*Diaphragm leak sensor, Namur*	*Part*	*1 00 773 99*	*1 00 773 99*	*1 00 773 99*	*1 00 773 99*	*1 00 773 99*	*1 00 773 99*
	-	*1*	*Adapter, muffler*	*PE*	*6 10 033 52*	*-*	*-*	*-*	*-*	*-*
D3	*51*	*1*	*Diaphragm leak sensor, Namur*	*Part*	*1 00 773 99*	*1 00 773 99*	*1 00 773 99*	*1 00 773 99*	*1 00 773 99*	*1 00 773 99*
	-	*1*	*Adapter, muffler*	*PE*	*6 10 033 52*	*-*	*-*	*-*	*-*	*-*
	-	*1*	*Circuit breaker*	*Part*	*1 00 370 99*	*1 00 370 99*	*1 00 370 99*	*1 00 370 99*	*1 00 370 99*	*1 00 370 99*

Special diaphragms (option code L+P)

Code L: Conductive PTFE/EPDM composite diaphragm

For pumps used in Group IIC environment, conductive PTFE and EPDM composite diaphragm without ribs can be provided.

Code P: Modified PTFE diaphragms

For media with strong permeability (e.g., benzene and solvent) and vacuum pumping applications, PTFE/EPDM composite diaphragm with modified PTFE can be provided.

Spare parts list for special diaphragms					**E 15**	**E 25**	**E 40**	**E 50**
Code	**Serial number**	**Quantity**	**Name**	**Materials**	**PART #**	**PART #**	**PART #**	**PART #**
L	18	2	The diaphragm is made of conductive PTFE	Conductive PTFE/EPDM	1 15 031 68	1 25 031 68	1 40 031 68	1 50 031 68
P	18	2	The diaphragm is made of modified PTFE	Modified PTFE/EPDM	1 15 031 98	1 25 031 98	1 40 031 98	1 50 031 98

Center housing of ANSI standard connection (option code: W)

The Center housing [4] connection of the standard product is DIN standard flange. However, an ANSI standard flange connection can be provided upon request (Option Code W).

List of spare parts for ANSI Center housing					E 15	E 25	E 40	E 50
Code	**Serial number**	**Quantity**	**Name**	**Materials**	**PART #**	**PART #**	**PART #**	**PART #**
W	4	1	Center housing ANSI, code E	PE	7 15 E11 51	7 25 E11 51	7 40 E11 51	7 50 E11 51
			Center housing ANSI, code F	Conductive PE	7 15 E11 55	7 25 E11 55	7 40 E11 55	7 50 E11 55
			Center housing ANSI, code T	PTFE	7 15 E11 60	7 25 E11 60	7 40 E11 60	7 50 E11 60
			Center housing ANSI, code U	PTFE Conductive	7 15 E11 65	7 25 E11 65	7 40 E11 65	7 50 E11 65

Flange connection (option codes F3, F4, F5)

This series of products provide flange connection conforming to DIN/PN10 or ANSI standards. The intermediate pump housing includes a pre-embedded stainless steel threaded sleeve for flange mounting (code F3/F4/F5/F6 for DIN flange and F3w/F4w/F5w/F6w for ANSI flange). Before connecting the flange, the O-ring shall be put into the groove of the water pipe to improve its sealing performance. The flange O-ring [30] is made of EPDM (code F3), FEP (code F4), NBR (code F5) and FKM (code F6).

Pump specification	E 15	E 25	E 40	E 50
Flange connection torque value Nm (ft lbs)	4 (3)	5 (3.7)	12 (8.9)	15 (11.1)

List of spare parts for flange connection					E 15	E 25	E 40	E 50
Code	**Serial number**	**Quantity**	**Name**	**Materials**	**PART #**	**PART #**	**PART #**	**PART #**
F3	- 30	12 2	Threaded sleeve, Center housing DIN Flange o-ring, Center housing DIN	304 EPDM	2 15 B69 22 9 33 A32 72	2 15 B69 22 9 50 A33 72	2 40 B69 22 9 62 A34 72	2 40 B69 22 9 73 A35 72
F3w	- 30	12 2	Threaded sleeve, Center housing ANSI Flange o-ring, Center housing ANSI	304 EPDM	3 15 A69 22 9 23 F88 72	3 15 A69 22 9 40 A13 72	3 15 A69 22 9 62 A34 72	3 25 A69 22 9 73 A35 72
F4	- 30	12 2	Threaded sleeve, Center housing DIN Flange o-ring, Center housing DIN	304 FEP/FKM	2 15 B69 22 9 33 A32 59	2 15 B69 22 9 50 A33 59	2 40 B69 22 9 62 A34 59	2 40 B69 22 9 73 A35 59
F4w	- 30	12 2	Threaded sleeve, Center housing ANSI Flange o-ring, Center housing ANSI	304 FEP/FKM	3 15 A69 22 9 23 F88 59	3 15 A69 22 9 40 A13 59	3 15 A69 22 9 62 A34 59	3 25 A69 22 9 73 A35 59
F5	- 30	12 2	Threaded sleeve, Center housing DIN Flange o-ring, Center housing DIN	304 NBR	2 15 B69 22 9 33 A32 71	2 15 B69 22 9 50 A33 71	2 40 B69 22 9 62 A34 71	- -
F5w	- 30	12 2	Threaded sleeve, Center housing ANSI Flange o-ring, Center housing ANSI	304 NBR	3 15 A69 22 9 23 A88 71	3 15 A69 22 9 40 A13 71	3 15 A69 22 9 62 A34 71	- -

Food pumps (EC 1935/2004) (option code H)

ALMATEC E series pumps are not designed for effective cleaning, but they are still widely used in the food industry. Pumps with option code H feature wetted parts compliant with EC 1935/2004 for food contact. These pumps are shipped with a special label and a declaration of conformity.

Materials complying with USP Grade VI (code USP)

ALMATEC defines some plastic and metal air-operated double diaphragm pumps with wetted parts that comply with "USP Class VI." In this way, in the application that requires the materials of wetted parts of the pump to meet the requirements of "USP Grade VI", the conformity of the materials of the wetted parts of the pump can be greatly simplified, which can be clearly identified by the product model and the corresponding certificate.

Suggestions for handling sensitive media:

By choosing the right materials, all wetted parts in the pump are made of materials suitable for the conveyed media and food contact. However, in case of malfunction, the media may come into contact with non-wetted parts (such as pneumatic control elements in the pump) in normal operation. Therefore, we suggest that this batch of media should be discarded as usual after a malfunction when dealing with sensitive media.

Please note that food contact compliance only applies to the material of wetted parts and not to the pump's hygienic construction.

Pumps with pulsation dampers (option code TV)

ALMATEC pump can be retrofitted with pulsation dampers without modifying the pipeline. Unlike the standard pump, pumps with the option code TV adopt a specific installation method allowing pulsation dampers to be added without making any changes to the pump (see Page 36 of this manual for details). Special parts are not included in this code. It should be noted that in this installation state, the pump does not have a suction port at the bottom. Instead, there is one at the top, which is plugged at the factory.

Draining system (option codes R1, R2, R3, R4, R5, R6)

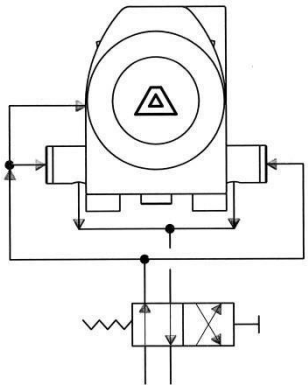

Pumps equipped with a unique ALMATEC draining system can be drained via an inclined discharge pipe installed at the factory. This system is not suitable for flushing the pump with other liquids, nor for flushing through the suction port or discharge ports. It consists of a bypass system located in the Side housing [1] and can be activated by manual valve (code R1/R2/R5) or pneumatic valve (code R3/R4/R6). Turn the manual valve (code R1/R2/R5) about 10mm to the left (note: since the valve has no limit stopper, take care not to pull the manual valve all the way out). While the pump is running, allow it to decelerate slowly until it stops. The figure on the left shows the pneumatic connection diagram for pumps with a pneumatic draining system (code R3/R4/R6, with a minimum pressure of 3 bar). Through a 4/2-way directional valve (not included in the scope of supply), the draining system can be automatically activated when the pump is shut down. The O-ring of the Side housing is available in EPDM (code R1/R3), FEP (code R2/R4) or NBR (code R5/R6).

List of spare parts for draining system					**E 15**	**E 25**	**E 40**	**E 50**
Code	**Serial number**	**Quantity**	**Name**	**Materials**	**PART #**	**PART #**	**PART #**	**PART #**
R1	1	2	Side housing of backflush system:					
			- Code E	PE	7 15 B10 51	7 25 B10 51	7 40 B10 51	7 50 B10 51
			- Code F	Conductive PE	7 15 B10 55	7 25 B10 55	7 40 B10 55	7 50 B10 55
			- Code T	PTFE	7 15 B10 60	7 25 B10 60	7 40 B10 60	7 50 B10 60
			- Code U	PTFE Conductive	7 15 B10 65	7 25 B10 65	7 40 B10 65	7 50 B10 65
	31	2	O-ring, Side housing	EPDM	9 20 A31 72	9 20 A31 72	9 33 A32 72	9 33 A32 72
	32	2	Drain plug	PTFE	2 15 A23 60	2 15 A23 60	2 40 A23 60	2 40 A23 60
	33	4	Plug	PTFE	7 15 A22 60	7 15 A22 60	7 40 A22 60	7 40 A22 60
R2	31	2	Same as R 1, except O-ring, Side housing	FEP/FKM	9 20 A31 59	9 20 A31 59	9 33 A32 59	9 33 A32 59
R3	32	2	Same as R 1, except: Piston	PTFE	2 15 A24 60	2 15 A24 60	2 40 A24 60	2 40 A24 60
	35	2	housing piston	Conductive PE	2 15 A25 56	2 25 A25 56	2 40 A25 56	2 50 A25 56
	36	2	Piston cover	Conductive PE	2 15 A26 55	2 15 A26 55	2 40 A26 55	2 40 A26 55
	37	4	O-ring, piston and piston cover	NBR/EPDM	9 28 F34 71	9 28 F34 71	9 37 A03 72	9 37 A03 72
R4	31	2	Same as R 3, except: O-ring, Side housing	FEP/FKM	9 20 A31 59	9 20 A31 59	9 33 A32 59	9 33 A32 59
R5	31	2	Same as R 1, except: O-ring, Side housing	NBR	9 20 A31 71	9 20 A31 71	9 33 A32 71	-
R6	31	2	Same as R 3, except: O-ring, Side housing	NBR	9 20 A31 71	9 20 A31 71	9 33 A32 71	-

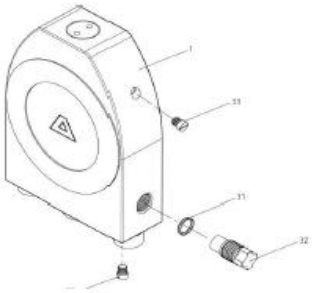

Manual draining system
(Code R 1 / R 2 / R 5)

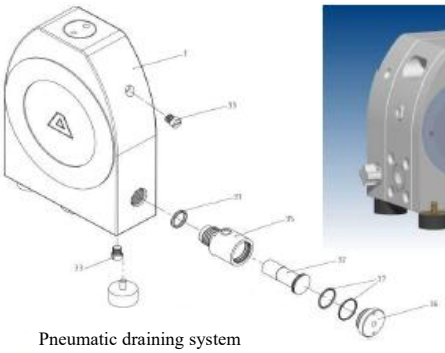

Pneumatic draining system
(Code R 3 / R 4 / R 6)

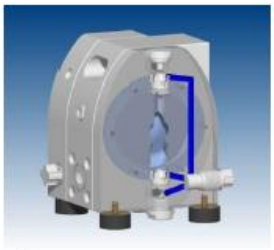

Pumps with PTFE diaphragm and FKM housing gasket (option code V)

FKM gasket features chemical resistance for most applications that require PTFE diaphragm (please check compatibility). These gaskets are highly elastic, provide excellent sealing properties, and are cost-effective. (FKM is available under several trade names, with the most common being Viton®, a trademark registered by DuPont).

List of spare parts for code TT-V pump					E 08	E 10	E 15	E 25	E 40	E 50
Code	**Serial number**	**Quantity**	**Name**	**Materials**	**PART #**	**PART #**	**PART #**	**PART #**	**PART #**	**PART #**
V	6	8	O-ring, sleeve	FKM	9 12 A29 75	9 15 A30 75	9 20 A31 75	9 33 A32 75	9 50 A33 75	9 62 A34 75
	10	2	O-ring, valve stopper, discharge valve	FKM	9 16 A23 75	9 19 A24 75	9 24 A25 75	9 38 A26 75	9 57 A27 75	9 76 A28 75
	12	2	O-ring, Side housing plug	FKM	9 14 B78 75	9 20 A02 75	9 25 A10 75	9 40 A13 75	9 62 A34 75	9 79 D53 75
	14	1	O-ring, Center housing plug	FKM	9 20 A31 75	9 20 A31 75	9 33 A32 75	9 50 A33 75	9 62 A34 75	9 73 A35 75

External control (option code Z)

This pump is not equipped with air control system nor muffler, but can be externally controlled by solenoid valves. The Center housing has two independent air source connections for supplying and exhausting the two working chambers in the near future. The solenoid valve is not included in the scope of supply. If the pump is equipped with this code, a separate list of spare parts will be provided. Dimensions for the connection position of the air source are also available upon request.

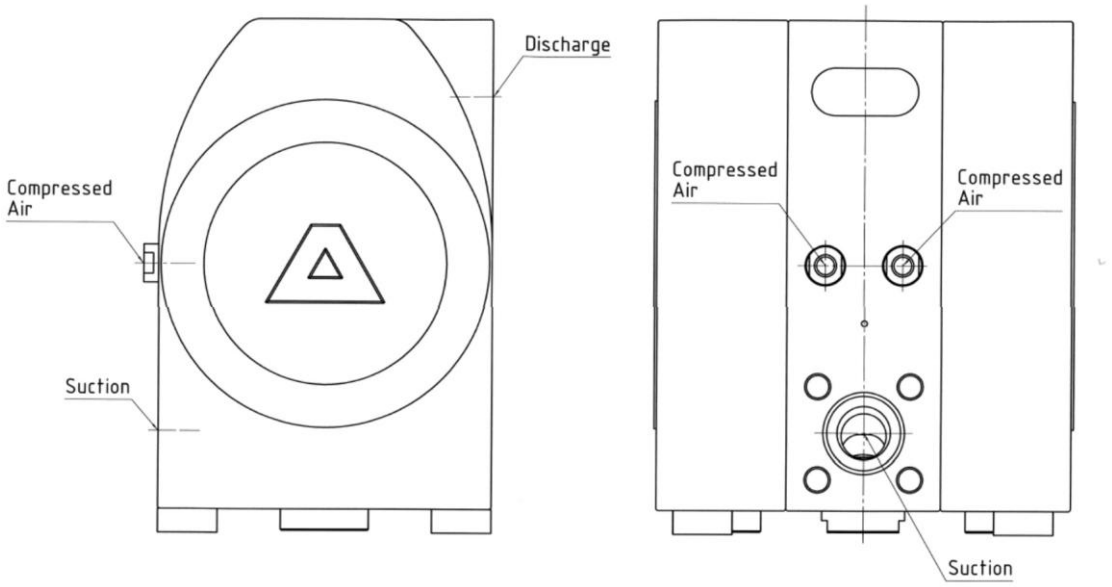

More options

Code OG: Nozzle without internal thread

Code X: Customized pump

In these cases, a separate list of spare parts will be provided.

Dimensional Drawing

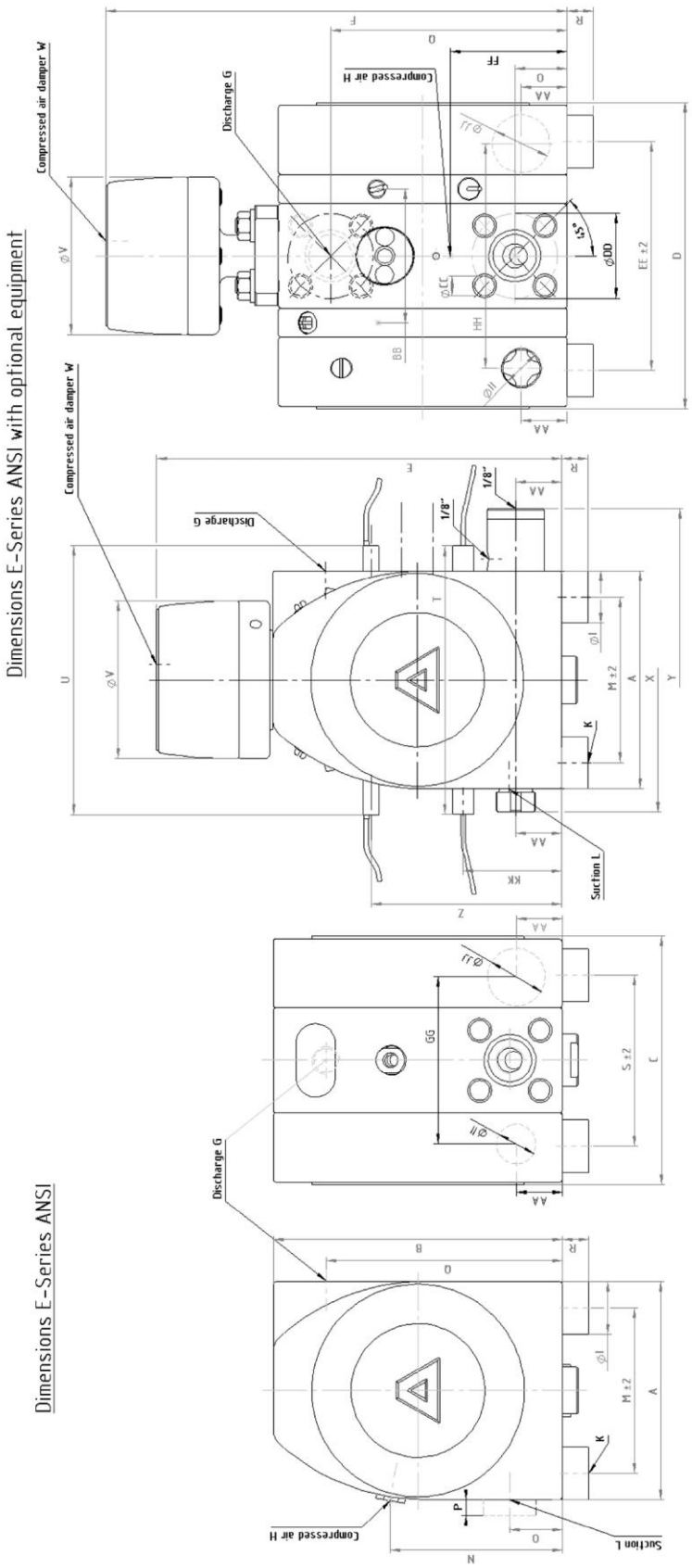

mm	A	B	C	D	E	F	G	H	I	K	L	M	N	O	P	Q	R	S	T	U	V	W	X	Y	Z	AA	BB	CC	DD	EE	FF	GG	HH	II	JJ	KK
E08	90	116	128	-	195	-	1/4"	1/8"	25	M6	1/4"	50	58	15	10	101	13	84	-	-	85	1/8"	-	-	-	-	-	-	-	-	58	-	-	-	-	-
E10	110	156	147	189	235	-	3/8"	1/8"	25	M6	3/8"	85	78	17	11	139	13	97	208	202	85	1/8"	-	-	93	-	75	-	-	139	78	-	-	-	-	32
E15	166	220	189	233	309	352	1/2"	1/4"	40	M8	1/2"	126	131	40	12	180	20	130	264	230	120	1/8"	201	262	145	35	102	½" UNC	60,5	174	89	127	171	30	44	75
E25	220	300	255	301	433	476	1"	1/4"	40	M8	1"	180	178	48	18	252	20	185	318	272	170	1/8"	252	316	190	49	118	½" UNC	79,2	231	122	164	210	30	44	120
E40	280	412	353	401	574	627	1 1/2"	1/2"	50	M10	1 1/2"	230	206	65	18	347	20	270	378	310	220	1/4"	316	374	226	72	154	½" UNC	98,6	318	206	229	277	42	61	186
E50	360	532	430	482	754	812	2"	1/2"	50	M10	2"	310	266	80	18	452	20	340	458	374	285	1/4"	392	454	302	82	186	5/8" UNC	120,7	392	266	278	330	42	61	236

inch	A	B	C	D	E	F	G	H	I	K	L	M	N	O	P	Q	R	S	T	U	V	W	X	Y	Z	AA	BB	CC	DD	EE	FF	GG	HH	II	JJ	KK
E08	3.5	4.6	5.0	-	7.7	-	1/4"	1/8"	1.0	M6	1/4"	2.0	2.3	0.6	0.4	4.0	0.5	3.3	-	-	3.3	1/8"	-	-	-	-	-	-	-	-	2.3	-	-	-	-	-
E10	4.3	6.1	5.8	7.4	9.3	-	3/8"	1/8"	1.0	M6	3/8"	3.3	3.1	0.7	0.4	5.5	0.5	3.8	6.0	7.1	3.3	1/8"	-	-	3.7	-	3.0	-	-	5.5	3.1	-	-	-	-	1.3
E15	6.5	8.7	7.4	9.2	12.2	13.9	1/2"	1/4"	1.6	M8	1/2"	5.0	5.2	1.6	0.5	7.1	0.8	5.1	8.0	8.1	4.7	1/8"	7.9	10.3	5.7	1.4	4.0	1/2" UNC	2.4	6.9	3.5	5.0	6.7	1.2	1.7	3.0
E25	8.7	11.8	10.0	11.9	17.0	18.7	1"	1/4"	1.6	M8	1"	7.1	7.0	1.9	0.7	9.9	0.8	7.3	10.2	9.6	6.7	1/8"	9.9	12.4	7.5	1.9	4.6	1/2" UNC	3.1	9.1	4.8	6.4	8.3	1.2	1.7	4.7
E40	11.0	16.2	13.9	15.8	22.6	24.7	1 1/2"	1/2"	2.0	M10	1 1/2"	9.1	8.1	2.6	0.7	13.7	0.8	10.6	12.8	12.6	8.7	1/4"	12.4	14.7	8.9	2.8	6.1	1/2" UNC	3.9	12.5	8.1	9.0	10.9	1.7	2.4	7.3
E50	14.2	20.9	16.9	19.0	29.7	32.0	2"	1/2"	2.0	M10	2"	12.2	10.5	3.1	0.7	17.8	0.8	13.4	15.9	15.7	11.2	1/4"	15.4	17.9	11.9	3.2	7.3	5/8" UNC	4.8	15.4	10.5	10.9	13.0	1.7	2.4	9.3

ALMATEC Pulsation Dampers: ET Series and ET-F Series

ALMATEC ET and ET-F series pulsation dampers represent the latest generation of active pulsation dampers, designed specially for conversion to ALMATEC E series air-operated double diaphragm pumps. It should be noted that the pulsation damper will reduce the actual flow rate of the pump depending on different working points.

Before using an ALMATEC pulsation damper, please ensure that its construction materials can withstand the corrosion of pumped media. To check this, the exact model of the damper should be known, which is marked on the nameplate of the damper together with the serial number and year of manufacture.

Example of damper models:

ET 15 E A E - F

Flange connection: DIN (F) or ANSI (Fw) blank: threaded connection

Diaphragm material:

E	EPDM
N	NBR
T	PTFE/EPDM composite
T-L	Conductive PTFE/EPDM composite
T-P	Modified PTFE/EPDM composite

Damper head material:

A	PA
F	Conductive PE

Damper housing material:

E	PE
F	Conductive PE
T	PTFE
U	PTFE Conductive

Specifications (nominal connection size): 10: 3/8", 15: 1/2", 25: 1", 40: 1 1/2", 50: 2"

ALMATEC ET series pulsation dampers

Air inlet connection:	ET 10 - ET 25: R 1/8“, ET 40 / ET 50: R 1/4“
Maximum operating pressure:	7 bar / 100 psig
Maximum operating temperature:	PE housing: 70°C/158°F PTFE housing: ET 10 100°C/212°F Other models: 120°C/248°F (80°C/176°F for those with conductive PE damper head)

For applications with flammable liquids or use in explosion-proof areas, only dampers made of conductive plastic (code F or U) can be used. The damper does not need to be grounded separately, because the damper is directly connected to the E-series pump, which is conductive and must be grounded (please refer to the ATEX instructions on page 5-6).

Usually, the pump and damper are shipped fully assembled. For larger pumps, they may be shipped separately. If shipped separately, the damper must be carefully screwed into the threaded hole on the top of the Center housing until it contacts the pump. Overtightening may damage the thread. In addition, make sure that the O-ring [10] is correctly seated in the groove.

As long as the inlet and outlet of ALMATEC pump are horizontally aligned, the ET- damper can be easily installed on the E series pump without altering the pipeline. Make sure that the screw plug (part 13 in the pump exploded view) on the Center housing is in the correct position. For pumps delivered without a damper, the screw plug is usually located at the bottom. Rotate the intermediate pump housing 180°, move the screw plug to the top, insert the flange O-ring [10], and screw the damper onto the pump. When disassembling a used pump, observe the warnings on pages 12–13 of this manual.

Before installation, remove the yellow sealing cap on the air inlet at the top of the damper [3]. To ensure proper operation, the damper must have its own air source, which must be derived from the air source of the pump. The air supply pressure of the pump and the pulsation damper must be identical, with no shut-off valve or regulating valve between the pump and the damper. The air supply must be oil-free, dry and clean. The damper needs to have a back pressure of at least 1 bar for optimal performance. When operating an empty damper, do so slowly in conjunction with the pump. The damper can be automatically adjusted to adapt to all changing operating conditions.

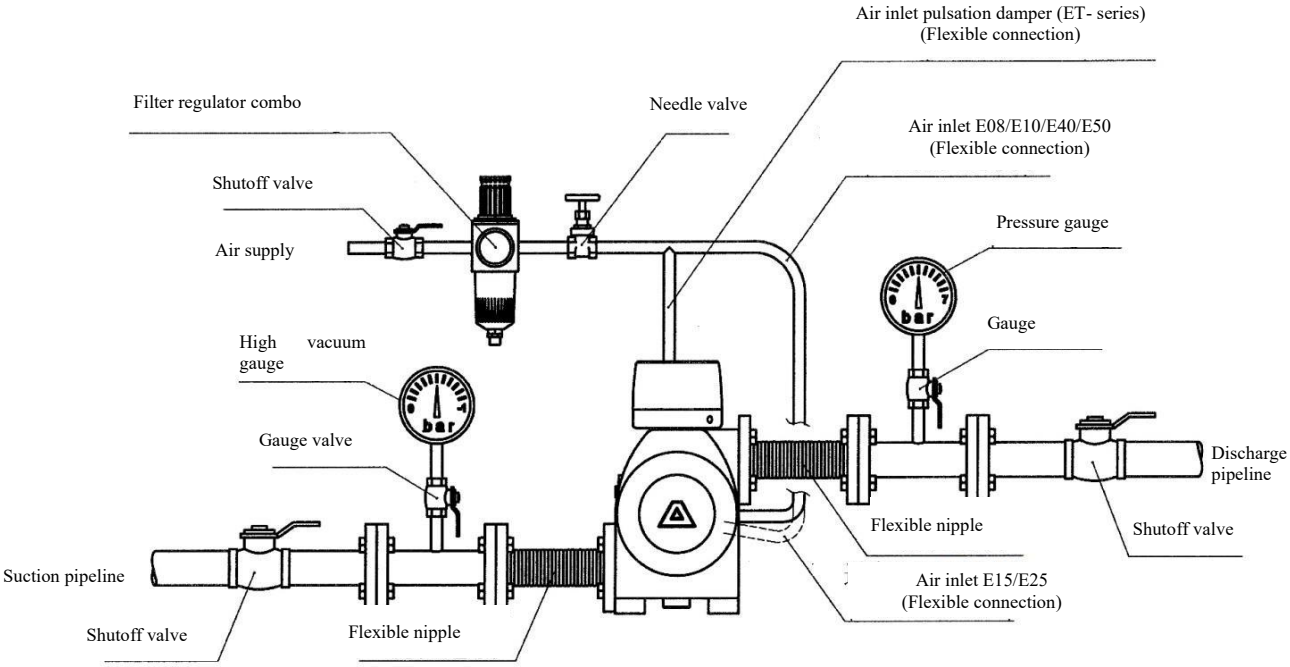

- Do not use any thread sealant to connect the pump and damper, as this may damage the threads.
- Before starting the pulsation damper and after operation for several hours, the housing bolt [6] shall be adjusted according to the torque value given in the following table, as the structural parts have stabilized at this time. The adjustment shall also be performed after extended periods of inactivity, significant temperature fluctuations, transportation, or disassembly and reassembly.
- When testing the pressure of a system that includes both a pump and damper, it can only be carried out after both ports of the combination (pump and damper) are disconnected from the pressure pipeline, or by using the pressure generated by the combination itself. The pressure source in the factory may damage the pump and pulsation damper.
- Before starting to disassemble the pump, make sure that both the pump and damper are drained and rinsed clean. Disconnect the pump and damper from the power sources at the air side and the product side. If the pump and damper are returned together, include a table outlining the physical and chemical properties of the fluid previously pumped.
- If the pump and damper are used to transport corrosive, dangerous or toxic liquids, please follow the relevant safety recommendations.
- Prior to reuse, verify that both the pump and damper are airtight.
- See page 12-13 for more warnings.

Damper specifications		ET 10	ET 15	ET 25	ET 40	ET 50
Torque values for damper housing bolts						
Nm (ft lbs):	PE material	-	3 (2.2)	6 (4.4)	10 (7.4)	11 (8.1)
	PTFE material	2 (1.5)	3 (2.2)	6 (4.4)	10 (7.4)	11 (8.1)

Precautions in disassembling ET pulsation dampers

Pull out the cover [5] and carefully unscrew the housing bolt [6]. All parts can then be disassembled. Detach the diaphragm [2] from the actuator shaft [7]. Replace the piston ring [8] and the O-ring below it, as they cannot be reused. There are five grooves in the blind hole of the actuator shaft [7].The piston ring [8] should be installed in the first, third, and fifth grooves. When installing a new piston ring [8], carefully compress the piston ring [8] into a waist shape with circlip pliers, insert it into the groove, and then press the piston ring [8] into the groove completely and evenly with a round tool.

List of spare parts for ET damper				ET 10	ET 15	ET 25	ET 40	ET 50
Serial number	**Quantity**	**Name**	**Materials**	**PART #**	**PART #**	**PART #**	**PART #**	**PART #**
1	1	Damper housing, code E	PE	-	7 15 A80 52	7 25 A80 52	7 40 A80 52	7 50 A80 52
		Damper housing, code F	Conductive PE	-	7 15 A80 56	7 25 A80 56	7 40 A80 56	7 50 A80 56
		Damper housing, code T	PTFE	7 10 A80 69	7 15 A80 69	7 25 A80 69	7 40 A80 60	7 50 A80 60
		Damper housing, code U	PTFE Conductive	7 10 A80 68	7 15 A80 68	7 25 A80 68	7 40 A80 65	7 50 A80 65
2	1	Diaphragm, code E	EPDM	-	1 10 031 72	1 15 031 72	1 25 031 72	1 40 031 72
		Diaphragm, code N	NBR	-	1 10 031 70	1 15 031 70	1 25 031 70	1 40 031 70
		Diaphragm, code T	PTFE	1 08 031 67	1 10 031 67	1 15 031 67	1 25 031 67	1 40 031 67
		Diaphragm, code T - L	PTFE Conductive	-	-	1 15 031 68	1 25 031 68	1 40 031 68
		Diaphragm, code T - P	Modified PTFE	-	-	1 15 031 98	1 25 031 98	1 40 031 98
3	*1*	*Damper head, code A*	*PA*	*7 10 A81 53*	*7 15 A81 53*	*7 25 A81 53*	*7 40 A81 53*	*7 50 A81 53*
		Damper head, code F	*Conductive PE*	*7 10 A81 55*	*7 15 A81 55*	*7 25 A81 55*	*7 40 A81 55*	*7 50 A81 55*
4	*1*	*Tension disc*	*304*	*7 08 A08 22*	*7 10 A08 22*	*7 15 A08 22*	*7 25 A08 22*	*7 40 A08 22*
5	*1*	*Cover, code A*	*PE*	*7 08 A09 51*	*7 10 A09 51*	*7 15 A09 51*	*7 25 A09 51*	*7 40 A09 51*
		Cover, code F	*Conductive PE*	*7 08 A09 55*	*7 10 A09 55*	*7 15 A09 55*	*7 25 A09 55*	*7 40 A09 55*
6	*	*Housing bolt*	*17-4PH*	*7 10 A83 22*	*7 15 A83 22*	*7 25 A83 22*	*7 40 A83 22*	*7 50 A83 22*
7	*1*	*Shaft*	*304*	*1 08 E82 22*	*1 10 E82 22*	*1 15 E82 22*	*1 25 E82 22*	*1 40 E82 22*
8	*3*	*Piston Rings*	*PTFE*	*1 08 A41 64*	*1 08 A41 64*	*1 15 A41 64*	*1 25 A41 64*	*1 40 A41 64*
9	*1*	*Muffler*	*PE*	*1 08 G44 51*	*1 08 G44 51*	*1 15 G44 51*	*1 25 G44 51*	*1 40 G44 51*
10	1	Flange o-ring, Center housing DIN:						
		- Code E	EPDM	9 20 A31 72	9 33 A32 72	9 50 A33 72	9 62 A34 72	9 73 A35 72
		- Code N	NBR	-	9 33 A32 71	9 50 A33 71	9 62 A34 71	9 73 A35 71
		- Code T	FEP/FKM	9 20 A31 59	9 33 A32 59	9 50 A33 59	9 62 A34 59	9 73 A35 59
		- Code T-V	FKM	9 20 A31 75	9 33 A32 75	9 50 A33 75	9 62 A34 75	9 73 A35 75
		Flange o-ring, Center housing ANSI:						
		- Code E	EPDM	9 20 A31 72	9 23 F88 72	9 40 A13 72	9 62 A34 72	9 73 A35 72
		- Code N	NBR	-	9 23 F88 71	9 40 A13 71	9 62 A34 71	9 73 A35 71
		- Code T	FEP/FKM	9 20 A31 59	9 23 F88 59	9 40 A13 59	9 62 A34 59	9 73 A35 59
		- Code T-V	FKM	9 20 A31 75	9 23 F88 75	9 40 A13 75	9 62 A34 75	9 73 A35 75
* ET 10 and ET 15: 4 pcs; ET 25 and ET 40: 6 pcs; ET 50: 8 pcs								

All parts in italics are non-wetted parts.

Pulsation damper, ET-USP series

				ET 10 TAT-USP	ET 15 TAT-USP	ET 25 TAT-USP	ET 40 TAT-USP	ET 50 TAT-USP
List of spare parts for ET-USP damper				**ET 10 TFT-USP**	**ET 15 TFT-USP**	**ET 25 TFT-USP**	**ET 40 TFT-USP**	**ET 50 TFT-USP**
Serial number	**Quantity**	**Name**	**Materials**	**PART #**	**PART #**	**PART #**	**PART #**	**PART #**
1	1	Damper housing, code T	PTFE	7 10 A80 69	7 15 A80 69	7 25 A80 69	7 40 A80 60	7 50 A80 60
2	1	Diaphragm, code T	PTFE	1 08 031 67	1 10 031 67	1 15 031 67	1 25 031 67	1 40 031 67
3	*1*	*Damper head, code A* *Damper head, code F*	*PA* *Conductive PE*	*7 10 A81 53* *7 10 A81 55*	*7 15 A81 53* *7 15 A81 55*	*7 25 A81 53* *7 25 A81 55*	*7 40 A81 53* *7 40 A81 55*	*7 50 A81 53* *7 50 A81 55*
4	*1*	*Tension disc*	*304*	*7 08 A08 22*	*7 10 A08 22*	*7 15 A08 22*	*7 25 A08 22*	*7 40 A08 22*
5	*1*	*Cover, code A* *Cover, code F*	*PE* *导电PE*	*7 08 A09 51* *7 08 A09 55*	*7 10 A09 51* *7 10 A09 55*	*7 15 A09 51* *7 15 A09 55*	*7 25 A09 51* *7 25 A09 55*	*7 40 A09 51* *7 40 A09 55*
6	*	*Housing bolt*	*17-4PH*	*7 10 A83 22*	*7 15 A83 22*	*7 25 A83 22*	*7 40 A83 22*	*7 50 A83 22*
7	*1*	*Shaft*	*304*	*1 08 E82 22*	*1 10 E82 22*	*1 15 E82 22*	*1 25 E82 22*	*1 40 E82 22*
8	*3*	*Piston Rings*	*PTFE*	*1 08 A41 64*	*1 08 A41 64*	*1 15 A41 64*	*1 25 A41 64*	*1 40 A41 64*
9	*1*	*Muffler*	*PE*	*1 08 G44 51*	*1 08 G44 51*	*1 15 G44 51*	*1 25 G44 51*	*1 40 G44 51*
10	*1*	Flange O-ring, Center housing DIN (code T)	FEP/FKM	9 20 A31 59	9 33 A32 59	9 50 A33 59	9 62 A34 59	9 73 A35 59
		Flange O-ring, Center housing ANSI (code T)	FEP/FKM	9 20 A31 59	9 23 F88 59	9 40 A13 59	9 62 A34 59	9 73 A35 59
* ET 10 and ET 15: 4 pcs; ET 25 and ET 40: 6 pcs; ET 50: 8 pcs								

All parts in italics are non-wetted parts.

Dimensions of ET pulsation damper

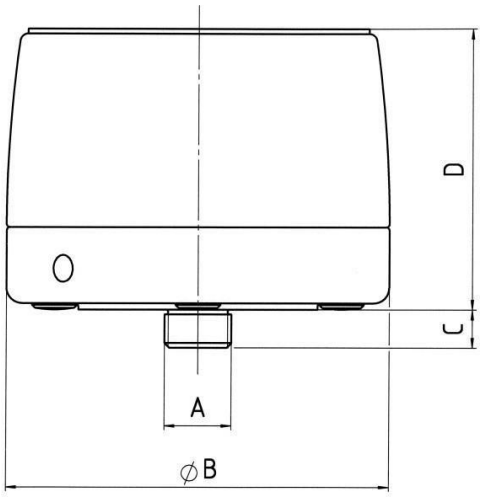

mm (inch)	A	B	C	D
ET 10	NPT 3/8”	85 (3.3)	11 (0.4)	79 (3.1)
ET 15	NPT 1/2”	120 (4.7)	12 (0.5)	89 (3.5)
ET 25	NPT 1”	170 (6.7)	14 (0.6)	133 (5.2)
ET 40	NPT 1-1/2”	220 (8.7)	16 (0.6)	162 (6.4)
ET 50	NPT 2”	285 (11.2)	18 (0.7)	222 (8.7)

Exploded view of ET pulsation damper

Quantity of item with serial number 6:	ET10/ET15: 4 pcs ET25/ET40: 6 pcs ET50: 8 pcs

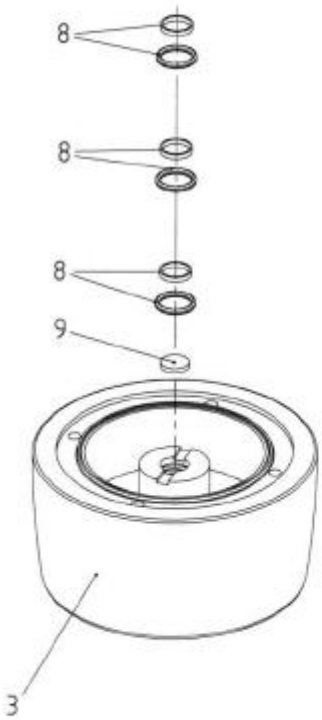

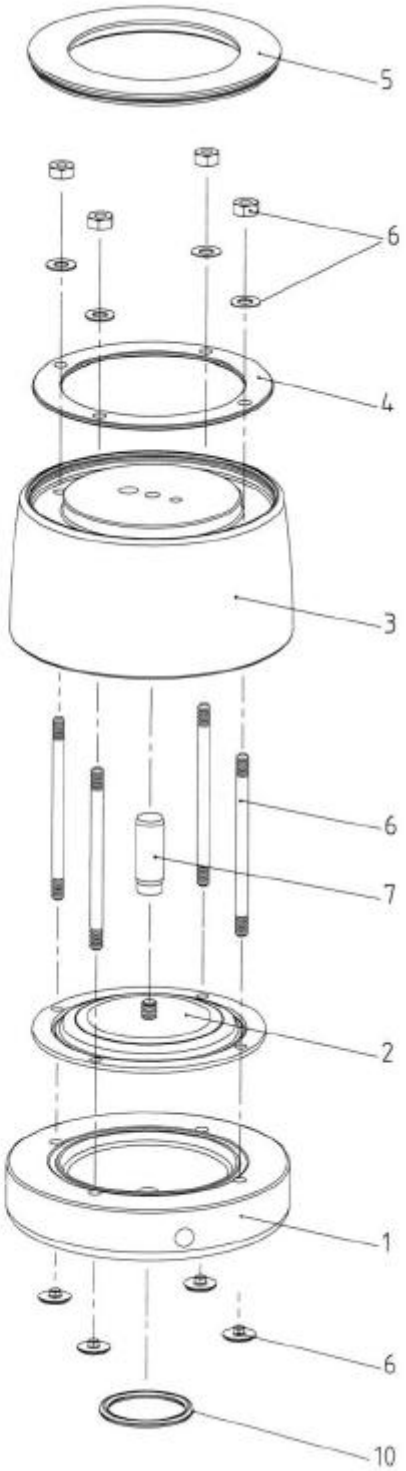

Precautions in ET-F series (flange type) pulsation damper

In addition to the pulsation damper with standard threaded connection, the damper with flange connection (ET-F series) can also be provided. Usually, the pump and damper are shipped fully assembled. For larger pumps, they may be shipped separately. If shipped separately, use the provided nuts, bolts, spring washers, and flat washers [11–14] to attach the damper to the pump.

Pump specifications and dimensions	ET 15	ET 25	ET 40	ET 50
Torque of flange connecting bolt Nm	4	5	12	15
(ft lbs):	(3)	(3.7)	(8.9)	(11.1)

List of spare parts for ET-F flange damper				ET 15 - F	ET 25 - F	ET 40 - F	ET 50 - F
Serial number	**Quantity**	**Name**	**Materials**	**PART #**	**PART #**	**PART #**	**PART #**
1	1	Damper housing DIN, code E	PE	7 15 B80 52	7 25 B80 52	7 40 B80 52	7 50 B80 52
		Damper housing DIN, code F	Conductive PE	7 15 B80 56	7 25 B80 56	7 40 B80 56	7 50 B80 56
		Damper housing DIN, code T	PTFE	7 15 B80 69	7 25 B80 69	7 40 B80 69	7 50 B80 69
		Damper housing DIN, code U	PTFE Conductive	7 15 B80 68	7 25 B80 68	7 40 B80 68	7 50 B80 68
		Damper housing ANSI, code E-W	PE	7 15 C80 52	7 25 C80 52	7 40 C80 52	7 50 C80 52
		Damper housing ANSI, code F-W	Conductive PE	7 15 C80 56	7 25 C80 56	7 40 C80 56	7 50 C80 56
		Damper housing ANSI, code T-W	PTFE	7 15 C80 69	7 25 C80 69	7 40 C80 69	7 50 C80 69
		Damper housing ANSI, code U-W	PTFE Conductive	7 15 C80 68	7 25 C80 68	7 40 C80 68	7 50 C80 68
2	1	Diaphragm, code E	EPDM	1 10 031 72	1 15 031 72	1 25 031 72	1 40 031 72
		Diaphragm, code N	NBR	1 10 031 70	1 15 031 70	1 25 031 70	1 40 031 70
		Diaphragm, code T	PTFE	1 10 031 67	1 15 031 67	1 25 031 67	1 40 031 67
		Diaphragm, code T - L	PTFE Conductive	-	1 15 031 68	1 25 031 68	1 40 031 68
		Diaphragm, code T - P	PTFE mod.	-	1 15 031 98	1 25 031 98	1 40 031 98
3	*1*	*Damper head, code A*	*PA*	*7 15 A81 53*	*7 25 A81 53*	*7 40 A81 53*	*7 50 A81 53*
		Damper head, code F	*Conductive PE*	*7 15 A81 55*	*7 25 A81 55*	*7 40 A81 55*	*7 50 A81 55*
4	*1*	*Tension disc*	*304*	*7 10 A08 22*	*7 15 A08 22*	*7 25 A08 22*	*7 40 A08 22*
5	*1*	*Cover, code A*	*PE*	*7 10 A09 51*	*7 15 A09 51*	*7 25 A09 51*	*7 40 A09 51*
		Cover, code F	*Conductive PE*	*7 10 A09 55*	*7 15 A09 55*	*7 25 A09 55*	*7 40 A09 55*
6	*	*Housing bolt*	*304*	*7 15 A83 22*	*7 25 A83 22*	*7 40 A83 22*	*7 50 A83 22*
7	*1*	*Shaft*	*304*	*1 10 E82 22*	*1 15 E82 22*	*1 25 E82 22*	*1 40 E82 22*
8	*3*	*Piston Rings*	*PTFE*	*1 08 A41 64*	*1 15 A41 64*	*1 25 A41 64*	*1 40 A41 64*
9	*1*	*Muffler*	*PE*	*1 08 G44 51*	*1 15 G44 51*	*1 25 G44 51*	*1 40 G44 51*
10	1	Flange o-ring, Center housing DIN, code E	EPDM	9 33 A32 72	9 50 A33 72	9 62 A34 72	9 73 A35 72
		Flange o-ring, Center housing DIN, code N	NBR	9 33 A32 71	9 50 A33 71	9 62 A34 71	9 73 A35 71
		Flange o-ring, Center housing DIN, code T	FEP/FKM	9 33 A32 59	9 50 A33 59	9 62 A34 59	9 73 A35 59
		Flange o-ring, Center housing DIN, code T-V	FKM	9 33 A32 75	9 50 A33 75	9 62 A34 75	9 73 A35 75
		Flange o-ring, Center housing ANSI, code E	EPDM	9 23 F88 72	9 40 A13 72	9 62 A34 72	9 73 A35 72
		Flange o-ring, Center housing ANSI, code N	NBR	9 23 F88 71	9 40 A13 71	9 62 A34 71	9 73 A35 71
		Flange o-ring, Center housing ANSI, code T	FEP/FKM	9 23 F88 59	9 40 A13 59	9 62 A34 59	9 73 A35 59
		Flange o-ring, Center housing ANSI, code T-V	FKM	9 23 F88 75	9 40 A13 75	9 62 A34 75	9 73 A35 75
11	*4*	*Hex nut DIN 934 DIN flange*	*303*	*9 12 B01 22*	*9 12 B01 22*	*9 16 B01 22*	*9 16 B01 22*
		Hex nut ANSI flange		*15-6420-03*	*15-6420-03*	*15-6420-03*	*15-6430-03*
12	*4*	*Stud DIN 913 DIN flange*	*303*	*9 12 C25 22*	*9 12 C25 22*	*9 16 C26 22*	*9 16 C27 22*
		Stud ANSI flange		*9 12 K55 22*	*9 12 K55 22*	*9 12 K65 22*	*9 16 K70 22*
13	*4*	*Spring washer DIN 2093 DIN flange*	*304*	*9 12 B54 22*	*9 12 B54 22*	*9 16 B54 22*	*9 16 B54 22*
		Spring washer ANSI flange		*9 14 B54 22*	*9 14 B54 22*	*9 14 B54 22*	*9 16 B54 22*
14	*4*	*Flat washer DIN 125 DIN flange*	*304*	*9 13 B51 22*	*9 13 B51 22*	*9 17 B51 22*	*9 17 B51 22*
		Flat washer ANSI flange		*9 13 B51 22*	*9 13 B51 22*	*9 13 B51 22*	*9 17 B51 22*
*ET 15 -F: 4 pcs; ET 25 -F and ET 40 -F: 6 pcs; ET 50 -F: 8 pcs							

All parts in italics are non-wetted parts.

ET-F-USP series (flange type) pulsation damper

				ET 15 TAT-F- USP	ET 25 TAT-F-USP	ET 40 TAT-F-USP	ET 50 TAT-F- USP
List of spare parts for ET-F -USP damper				**ET 15 TFT-F- USP**	**ET 25 TFT-F-USP**	**ET 40 TFT-F-USP**	**ET 50 TFT-F- USP**
Serial number	**Quantity**	**Name**	**Materials**	**PART #**	**PART #**	**PART #**	**PART #**
1	1	Damper housing DIN, code T Damper housing ANSI, code T-W	PTFE PTFE	7 15 B80 69 7 15 C80 69	7 25 B80 69 7 25 C80 69	7 40 B80 69 7 40 C80 69	7 50 B80 69 7 50 C80 69
2	1	Diaphragm, code T	PTFE	1 10 031 67	1 15 031 67	1 25 031 67	1 40 031 67
3	*1*	*Damper head, code A* *Damper head, code F*	*PA* *Conductive PE*	*7 15 A81 53* *7 15 A81 55*	*7 25 A81 53* *7 25 A81 55*	*7 40 A81 53* *7 40 A81 55*	*7 50 A81 53* *7 50 A81 55*
4	*1*	*Tension disc*	*304*	*7 10 A08 22*	*7 15 A08 22*	*7 25 A08 22*	*7 40 A08 22*
5	*1*	*Cover, code A* *Cover, code F*	*PE* *Conductive PE*	*7 10 A09 51* *7 10 A09 55*	*7 15 A09 51* *7 15 A09 55*	*7 25 A09 51* *7 25 A09 55*	*7 40 A09 51* *7 40 A09 55*
6	*	*Housing bolt*	*17-4PH*	*7 15 A83 22*	*7 25 A83 22*	*7 40 A83 22*	*7 50 A83 22*
7	*1*	*Shaft*	*304*	*1 10 E82 22*	*1 15 E82 22*	*1 25 E82 22*	*1 40 E82 22*
8	*3*	*Piston Rings*	*PTFE*	*1 08 A41 64*	*1 15 A41 64*	*1 25 A41 64*	*1 40 A41 64*
9	*1*	*Muffler*	*PE*	*1 08 G44 51*	*1 15 G44 51*	*1 25 G44 51*	*1 40 G44 51*
10	1	Flange o-ring, Center housing DIN (code T)	FEP/FKM	9 33 A32 59	9 50 A33 59	9 62 A34 59	9 73 A35 59
10	1	Flange o-ring, Center housing ANSI (code T)	FEP/FKM	9 23 F88 59	9 40 A13 59	9 62 A34 59	9 73 A35 59
11	*4*	*Hex nut DIN 934 DIN flange* *Hex nut ANSI flange*	*303*	*9 12 B01 22* *15-6420-03*	*9 12 B01 22* *15-6420-03*	*9 16 B01 22* *15-6420-03*	*9 16 B01 22* *15-6430-03*
12	*4*	*Stud DIN 913 DIN flange stud ANSI flange*	*303*	*9 12 C25 22* *9 12 J55 22*	*9 12 C25 22* *9 12 J55 22*	*9 16 C26 22* *9 12 J65 22*	*9 16 C27 22* *9 16 J70 22*
13	*4*	*Spring washer DIN 2093 DIN flange* *Spring washer ANSI flange*	*304*	*9 12 B54 22* *9 14 B54 22*	*9 12 B54 22* *9 14 B54 22*	*9 16 B54 22* *9 14 B54 22*	*9 16 B54 22* *9 16 B54 22*
14	*4*	*Flat washer DIN 125 DIN- flange* *Flat washer ANSI flange*	*304*	*9 13 B51 22* *9 13 B51 22*	*9 13 B51 22* *9 13 B51 22*	*9 17 B51 22* *9 13 B51 22*	*9 17 B51 22* *9 17 B51 22*
* ET 15 -F: 4 pcs; ET 25 -F and ET 40 -F: 6 pcs; ET 50 -F: 8 pcs							

All parts in italics are non-wetted parts.

Dimensions of ET-F (flange type) pulsation damper

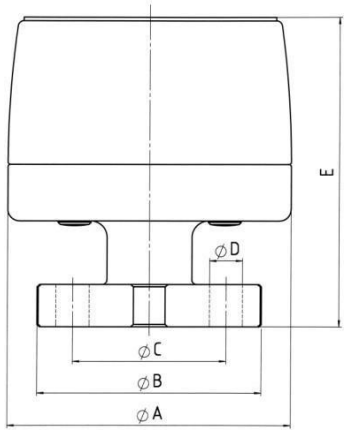

mm (inch)	A	B	C	D	E
ET 15 - F	120 (4.7)	95 (3.7)	65 (2.6)	14 (0.6)	132 (5.2)
ET 25 - F	170 (6.7)	115 (4.5)	85 (3.3)	14 (0.6)	176 (6.9)
ET 40 - F	220 (8.7)	150 (5.9)	110 (4.3)	18 (0.7)	215 (8.5)
ET 50 - F	285 (11.2)	165 (6.5)	125 (4.9)	18 (0.7)	280 (11.0)

Exploded view of ET-F (flange type) pulsation damper

Quantity of item with serial number 6:	ET10/ET15: 4 pcs ET25/ET40: 6 pcs ET50: 8 pcs

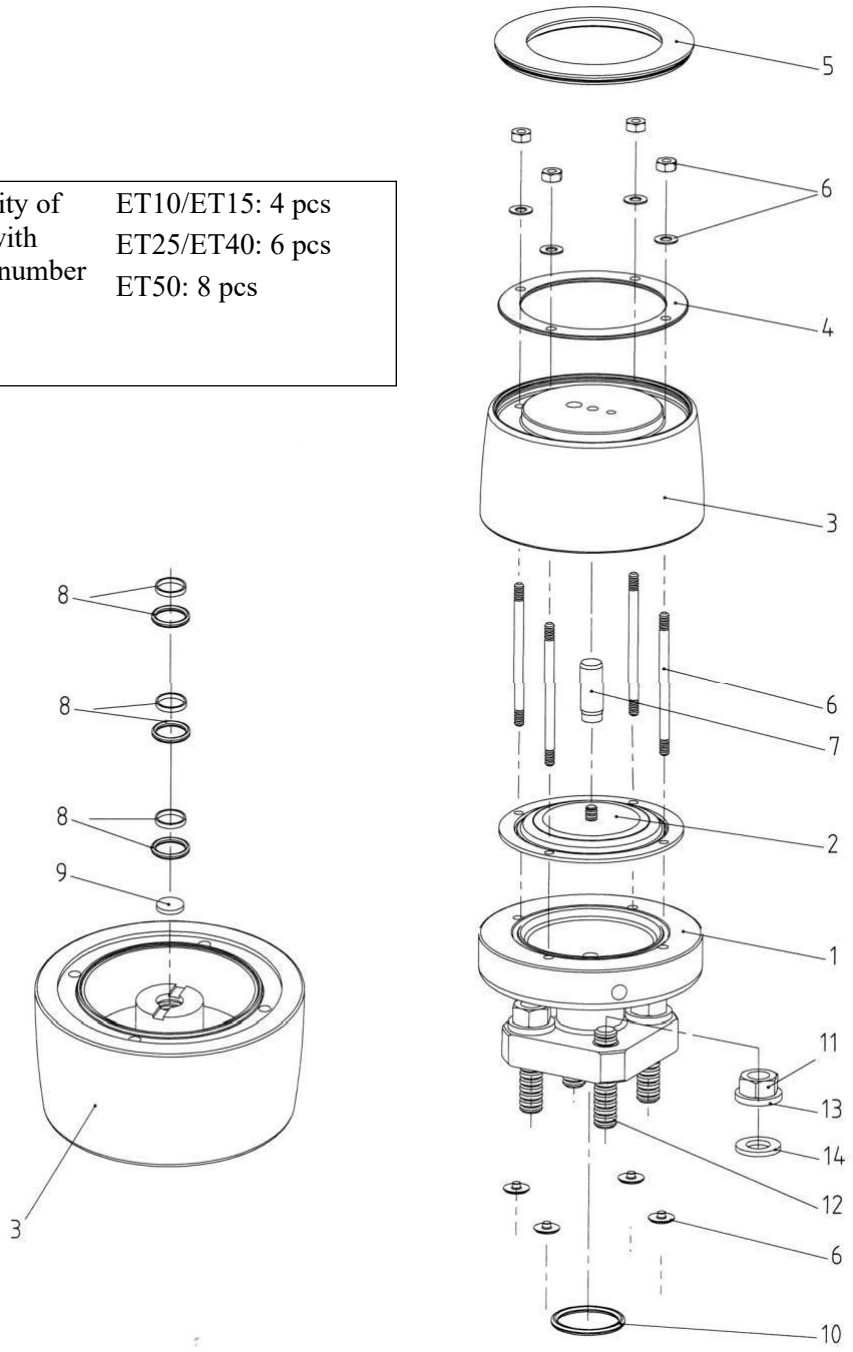

Subject to change without further notice, 2026/10

PSG
Hotline: +86 400 600 4026
E-mail: PSG-Asia@psgdover.com
Website: www.psgdover.com.cn